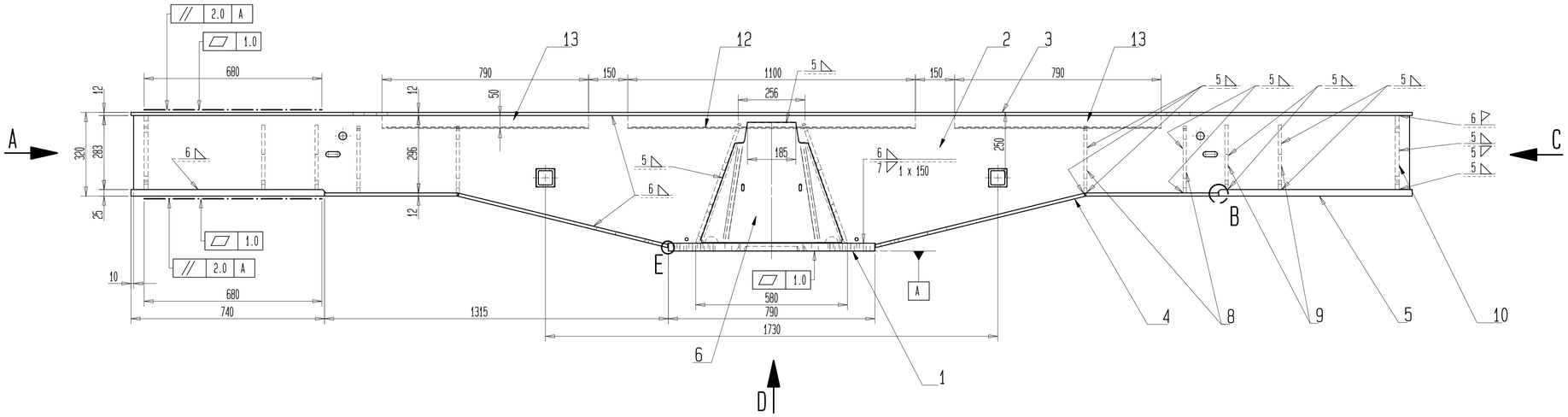

View A
S=1:5

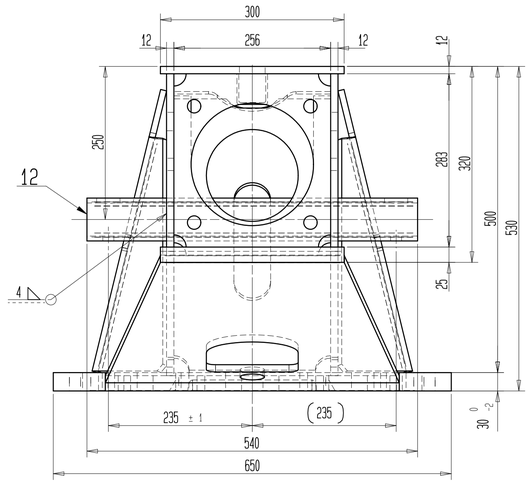

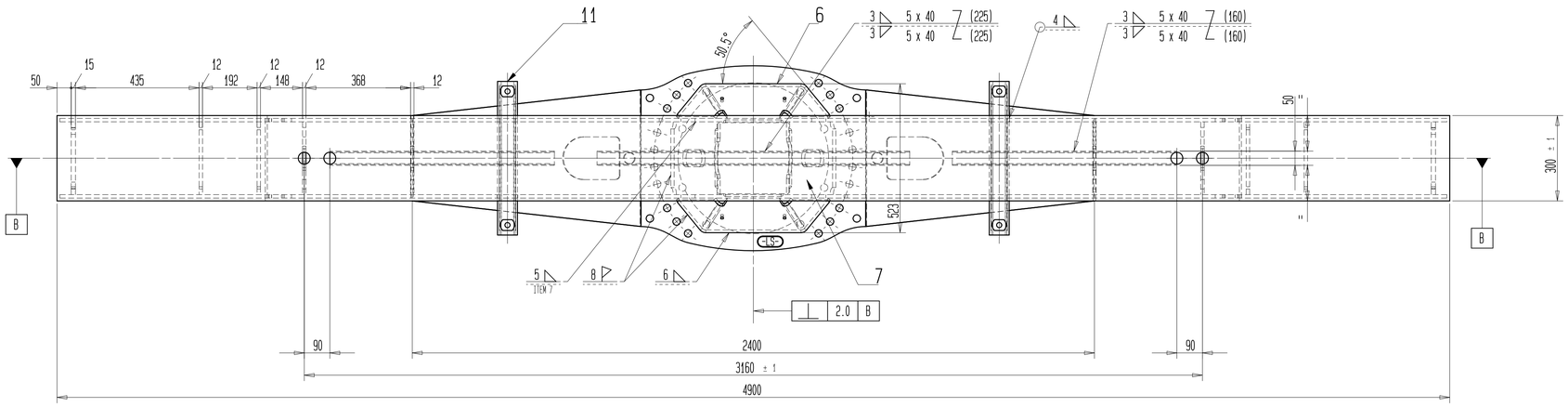

DETAIL B
S= 1:1

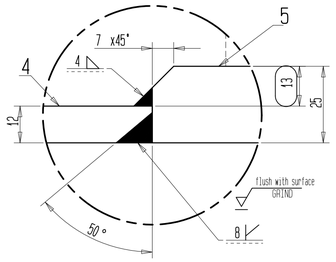

DETAIL E
S= 1:1

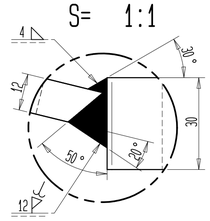

view D
M=1:5
item 1 only

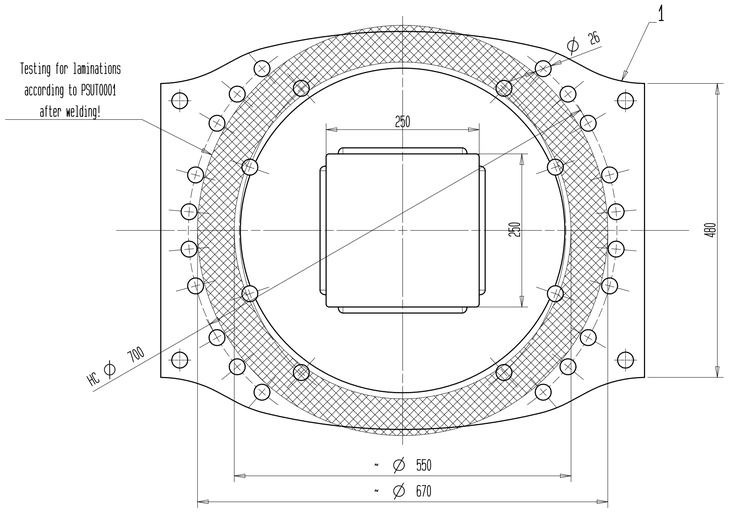

view C
S=1:5

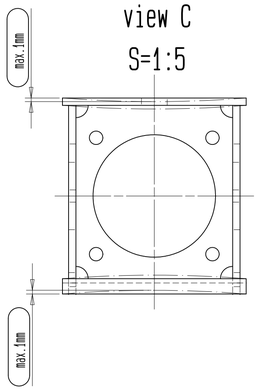

No OUTWARD curvature
of the sheet metal
allowed!

isometric projection

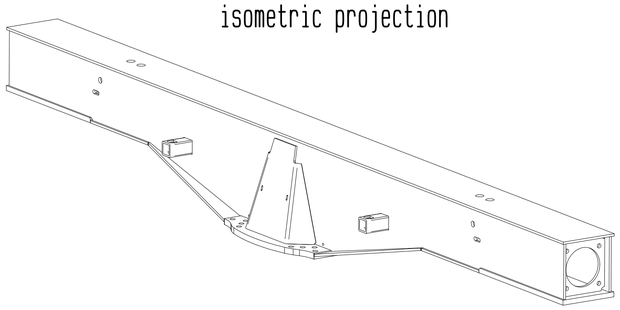

IMPORTANT: AFTER HOT-DIP
GALVANIZING, CARRY OUT MT
TESTING ACC.TO SPECIFICATION!

TEST ORDER

NDT:	MT: 10 % of weld seam length (min. 100% of weld seam ends)							UT - weld seam .. %	UT - for laminations	
of item:	2	2	2	2	1	1	4	..	item:	1 ..
with item:	3	4	5	6	4	6	5	..	MZ/A:	F ..
Seam Quality:	..	..	..	..	..	..	..	..	%	100 ..

Comment: in addition to ND testing see welding instructions SchP0004
..

Welding

Execution Class: EXC3

Visual Testing: 100 %

CERTIFICATION MARKING ON ITEM: 1 -LS-

Type and preparation of weld seam acc. to Doppelmayr Standard No.: 2
Tests and quality grades acc. to Doppelmayr Standard No.: 9
Weld seam design acc. to Doppelmayr welding guidelines DOSCHW 01

ISO 13920 General tol. welding		Nomin.dim. [mm]	2 -30	>30 -120	>120 -400	>400 -1000	>1000 -2000	>2000 -4000	>4000 -8000	>8000 -12000	>12000 -16000	>16000 -20000	>20000
	B	Linear measure				±1	±2	±3	±4	±6	±8	±10	±12	±14	±16
	F	Straightness, flatness, parallelism	-	1	1,5	3	4,5	6	8	10	12	14	16

Nomin.dim.[mm] (shorter side)	-400	400 -1000	>1000
Angle [°], [mm/m]	±45	±30 ±13	±20 ±8.6

HDG VF0001

11476190

Index	Revision	Date	Name

Configuration

ID NO.

Doppelmayr®
Innova Patent GmbH
Rickenbacherstr. 8-10
A-6960 WOLFURT/AUSTRIA

G-Class: I1

Scale 1/10
Factor: 1.000

	Date	Name
DRAWN	21.07.2016	Forster D.
approved	05.09.2016	Hintereggar A.
SAVED	2016-09-05/11:08:21	UG auto import

Installation B-MGD Mtatsminda Park
Order WAA0002267 Piece X

gross weight 837 kg

Plot remark 2018-06-13
Export plotted: stml 18 ld: 11476190

yoke 320/300 S=12 L=4900

f. gauge 5,2m / f. shaft-610
F. 10T-501C/16N,12T-420C ST-D

Original drawing no.	ID NO.
20050446H006110	11091650

DRAWING NO.	Index
20066266H006110	A

This drawing is intellectual property of DOPPELMAYR SEILBAHNEN GMBH and is transferred to INNOVA PATENT GMBH as of Dec.31st of the year of making and must not be copied nor utilized in whole or in part without permission and is subject to return upon request.

A1