Lubrication instructions:
Clean the bearing point. It must be dry before lubricating.
Before mounting the grip, the bearing point in the hanger head and the hanger axle of the grip must be lubricated all round. After the assembly, lubricate via the grease nipples.
Grease type acc. to operation manual specific to the installation.

DETACHABLE GRIP DT108 SEE DETAIL DRAWING

IMPORTANT: TO BE ADJUSTED EQUALLY FOR ALL CARRIERS.

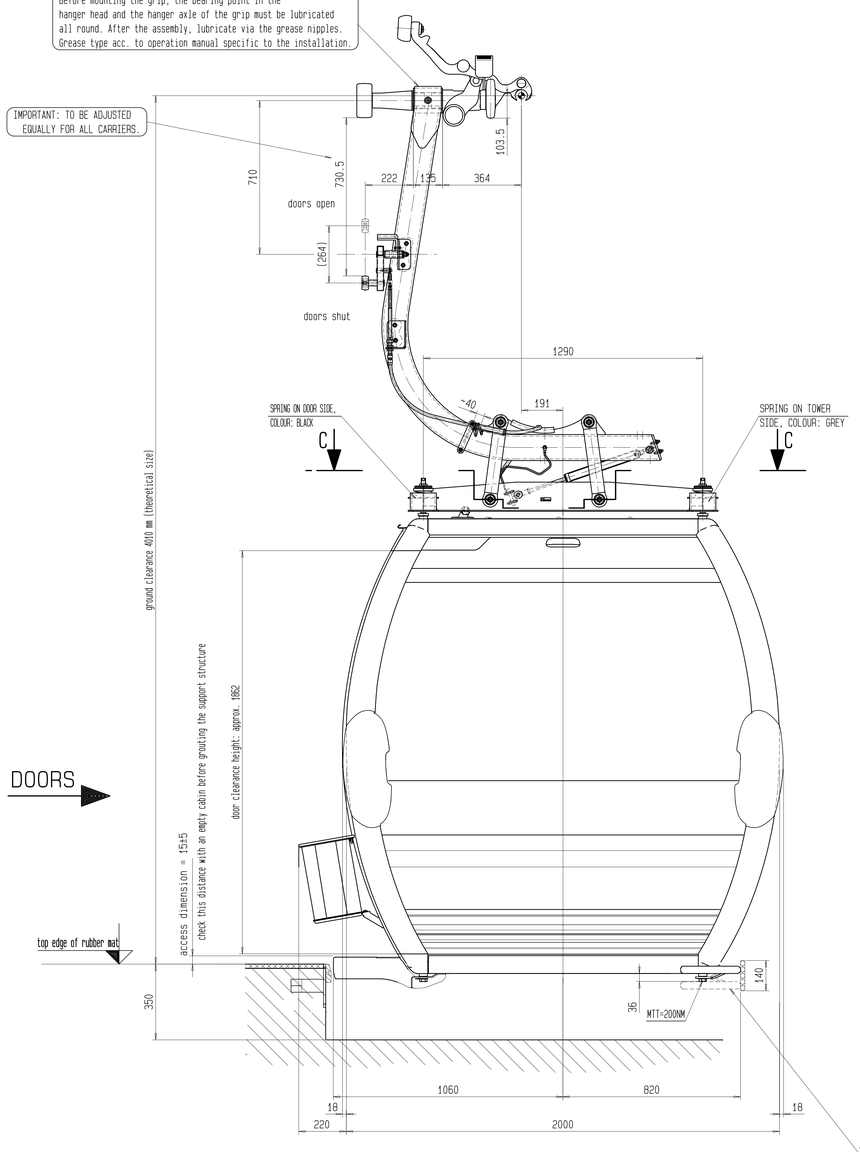

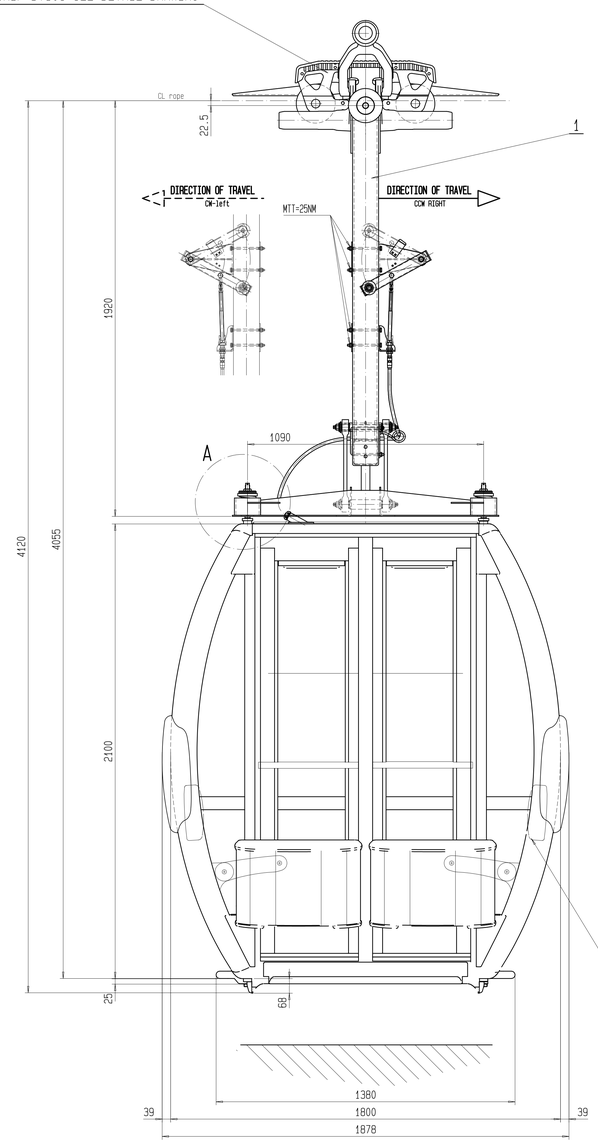

Course and guidance of the Meflex cable

Direction of travel ccw - right

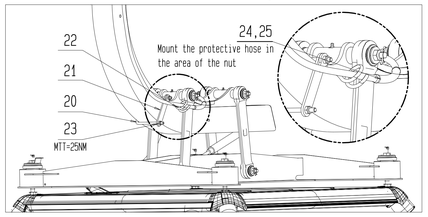

Direction of travel cw - left

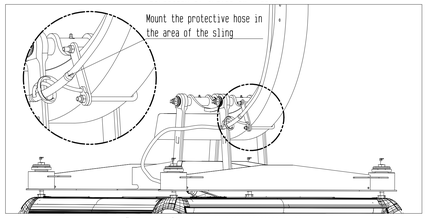

Item no. analogous to the above representation

Detail "A"

S=1:2

The tie rods are fixed to the cabin's roof with an antitwist protection. When fixing the item 5 by a locknut, the item 7 must be held up with a pin-type face spanner.

IMPORTANT: Keep to the access dimension!
Increase dimension "X" if need be!

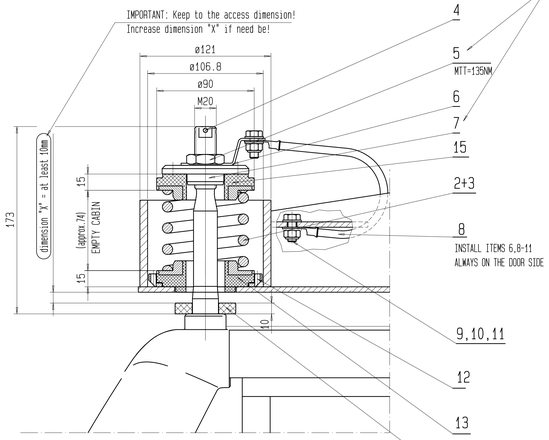

SECTION "C-C"

S=1:10

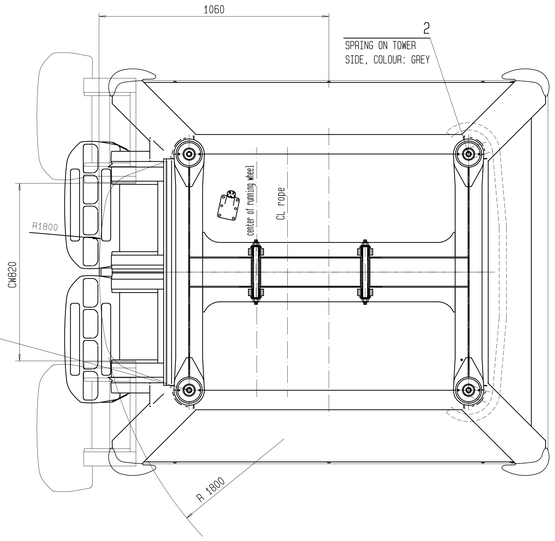

INTERNAL REMOTE CONTROL

IMPORTANT: TO BE ADJUSTED EQUALLY FOR ALL CARRIERS.

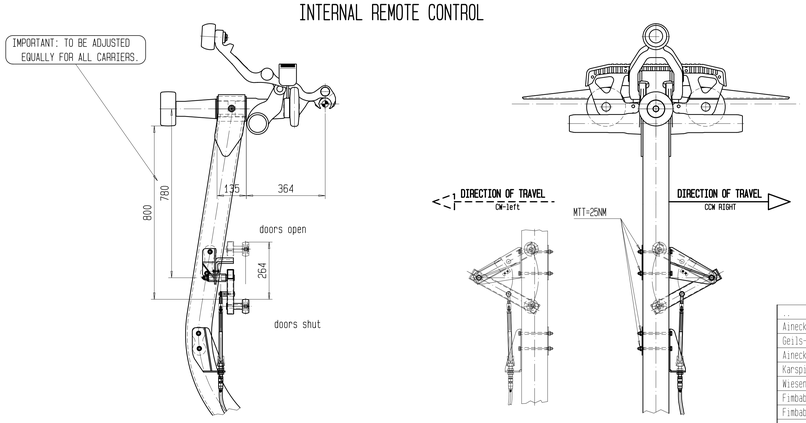

		Cuiyunshan Lift B	WAA0003986
		Ossi Reichert Bahn sect. 2	AAA0003559
		Ossi Reichert Bahn sect. 1	AAA0003558
		Alpbach Wildschönau Sekt.2	AAA0001568
		Alpbach Wildschönau Sekt.1	AAA0001567
		BSG Lift 1	WAA0002280
		Grächen-Hannigalp	GAA0001164
		Loterer Alm Bahn I	AAA0003075
		Königsleiten Dorfbahn TS 2	AAA0002956
Aineck Silver Jet 1. TS	AAA0003229	Königsleiten Dorfbahn TS 1	AAA0001721
Geiß-Hahnenmoos	GAA0001422	Schloßbergbahn	AAA0002707
Aineck Silver Jet 2. TS	AAA0003230	Kandersteg-Öschinen	GAA0000566
Karspitzbahn	AAA0001997	Almkopfbahn	AAA0002364
Wiesenalmbahn	AAA0002461	Höhe Mut II	AAA0001009
Fimbabahn II	AAA0002235	Höhe Mut I	AAA0001008
Fimbabahn I	AAA0002234	Panoramabahn	AAA0002231
CCW - RIGHT		CW - LEFT	

		Huong Tich Gondola 6	WAA0003611
		Songhuahu Line A	WAA0003290
		Taibaishan	WAA0003207
		Blatten-Chiematte	GAA0001555
		Badaling North Line	WAA0002781
		Lingshan	WAA0002650
		Rosa Khutor Lift SBT	WAA0001930
		Shahdag Lift 5	WAA0002085
		Shahdag Lift 1	WAA0001973
		Tianzhushan	WAA0001728
		KL Lift M Midstation	WAA0002242
		Gipfelbahn Königsleiten	AAA0002618
		Jiuhuashan Tiantai	WAA0002411
		Canols-Scharmoin	GAA0001142
		Huong Tich	WAA0001003
		Gaislachkogel 1	AAA0002555
		Qingchengshan	WAA0002309
		Sangingshan 2	WAA0002119
		Gaia Gaia	WAA0000909
		Gipfelbahn	AAA0001051
SUN MOON LAKE	WAA0002600	Jiuhuashan	WAA0000705
Rosa Khutor Lift O	WAA0002913	Almbahn	AAA0000257
Jungborg Downhill Gondola	WAA0003473	Skiwelt Kitzbüheler Alpen	AAA0001874
Chua Chan Pagoda	WAA0003869	Al Sokhna	WAA0001222
Trübsee-Stand	GAA0001372	Salvenbahn II	AAA0000515
Engelberg-Trübsee	GAA0001371	Shirenshan Gondola	WAA0001523
Songshan	WAA0003777	Bergenalm	AAA0002418
Tianzishan New Ropeway	WAA0003189	Trasseexpress	AAA0002279
Huangshan 3	WAA0002876	Stoq Izerski	AAA0000573
Dehkadeseeb	WAA0003234	Fallbichl	AAA0002227
CCW - RIGHT		CW - LEFT	

		Qixianling	WAA0002459
		Unterschwarzachbahn	AAA0002330
		Korek Mountain	WAA0002469
		Ny Heis Gondola VIP	WAA0002483
		Wudangshan	WAA0002122
		Own Ebn Ali	WAA0002087
		Chopok Zapad	WAA0001439
		Scuol-Motta Naluns	GAA0000388
		Laojunshan	WAA0001951
Rosa Khutor Lift P	WAA0002912	Gazprom II-VIP	WAA0001533
Qiyunshan	WAA0003941	Aineck-Gipfelbahn	AAA0002724
Panoramabahn Geols	AAA0003060	Yun Meng Shan	WAA0001922
Rickenbach-Rotenfluh	GAA0000421	Fenghuangling	WAA0000992
Kreuzjoch Panoramabahn	AAA0003469	Choralmbahn	AAA0002513
Tianmengshan	WAA0003001	Gazprom II-A1	WAA0001531
Siviez-Plan du Fou	GAA0001039	Bergama	WAA0001014
Intra Island Cableway	WAA0000914	Gazprom II-A2	WAA0001532
Rustaveli - Mtatsminda	WAA0002267	Tiergartenbahn	AAA0002139
Hündle	AAA0000024	EM-Bahn Klagenfurt	AAA0002575
Rosa Khutor Lift L	WAA0001986	Bana Cable Car	WAA0001583
Ettelsberg	AAA0003079	Kok-Tobe	WAA0001610
Hochalpila	AAA0001962	Kaiserbahn	AAA0002437
Grasjochbahn	AAA0002196	Kais I+II	AAA0002196
Bernkogelbahn I	AAA0002709	Sinaia	WAA0001256
Floraiadebahn	WAA0002343	Ettelsberg	AAA0000600
Oksziler Yurdu	WAA0001394	Medeo-Chimbulak	AAA0000970
Ji Zu Shan	WAA0001939	Yiláš I	WAA0000314
Falschbach	AAA0002687	Buchau	AAA0001554
Reiteralm-Holzerbahn	AAA0003006	Hausbergbahn	AAA0000370
Rougemont-Videmanett	GAA0001415	Mittelbergjoch	AAA0002106
CW - LEFT			

Index	Revision	Date	Name	Configuration
E	New representation for Meflex cable Note lubrication/item 24,25 new	2012-10-23	Eberle Patrik	
D	Dimensioning of loading height adapted Item 14 supplier part cabin h.	2010-11-30	Gstrein F.	
C	Platform fastening changed	2010-05-12	Gabriel M	
B	adapted: platform	2007-02-15	Gstrein F.	
A	changed: buffer	2006-05-16	Ilg Gernot	

Design chromated in yellow
Status G2

11179029
10632325
ID NO.

Doppelmayr
Innova Patent GmbH
Rickenbachstr. 8-10
A-6961 WOLFURTWESTEN

B-Class: SB

Scale 1/10 (factor: 1.000)
Drawn: 2005-03-09
approved:
Date Name
SAVED: 2017-10-06(15:20:46) Levente Bartha

Installation: B-MGD Mtatsminda Park
Order: WAA0002267 Piece: X
Gross weight: kg
2018-07-09
Export platform load 27.10 (DB32)

CARRIER OMGD 2005
CABIN CWA OMEGA IV-LWI
GRIP DT108, SUSPENSION GCS

Original drawing no.: 20012211J113300
ID NO.: 10569235
Drawing no.: 20013657J113300
Index: E

This drawing is intellectual property of DOPPELMAYR SEILBAHNEN GMBH and is transferred to INNOVA PATENT GMBH as of Dec.31st of the year of making and must not be copied nor utilized in whole or in part without permission and is subject to return upon request.

A0