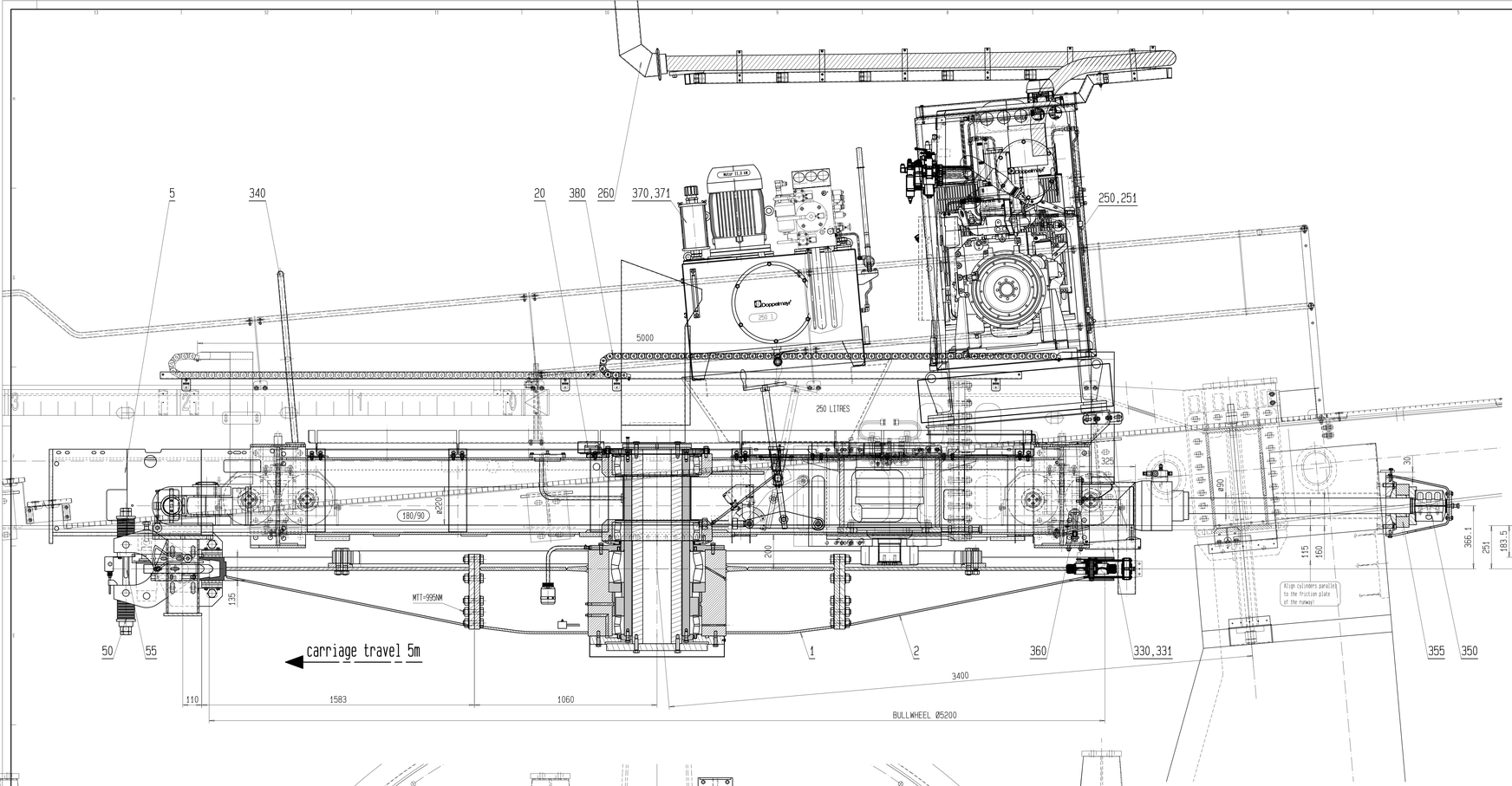

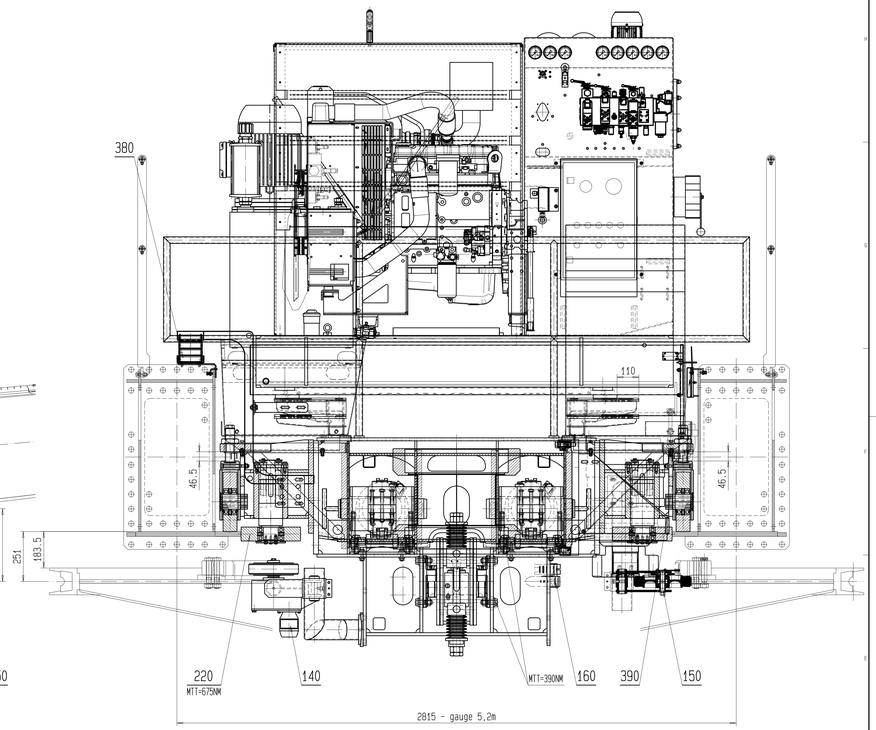

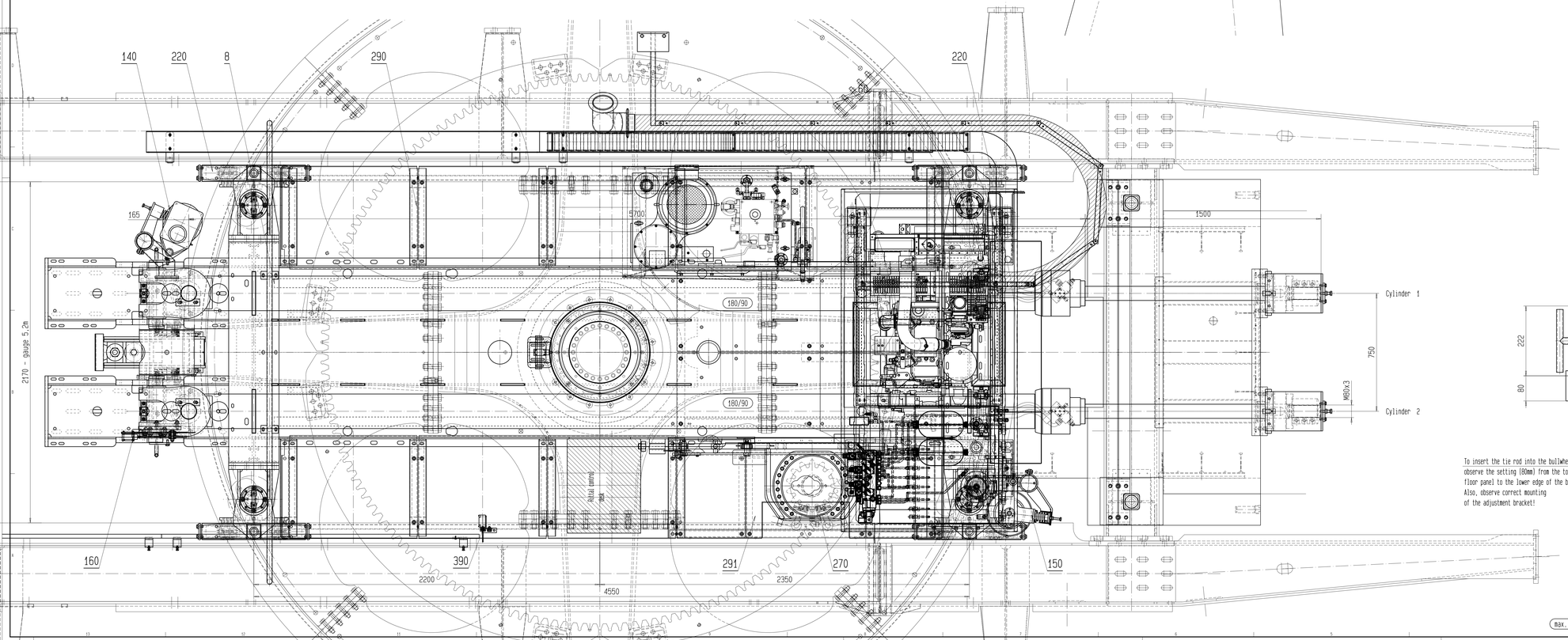

DETAIL 'CYLINDER IN BULLWHEEL FRAME'

S=1/5

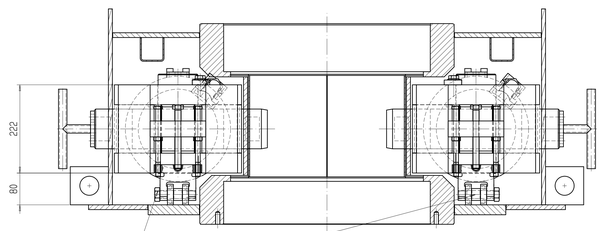

To insert the tie rod into the bullwheel frame, observe the setting (80mm) from the top edge of the floor panel to the lower edge of the bearing bracket! Also, observe correct mounting of the adjustment bracket!

max. transport weight: 10000kg - achievable by truck

Index	Revision	Date	Name	Datum/Kürzel

Doppelmayr — Innova Patent GmbH, Rickenbachstrasse. 8-10, A-6960 WOLFURT/AUSTRIA

B-CLASS: SB

Scale: 1/10 — Factor: 1

	Date	Name
Drawn	2012-09-14	Stricker Chr
approved		
SAVED	2015-04-01/07:37:18	Stricker Chr

ID NO.: 10948137

Installation: B-MGO Mtatsminda Park - Georgia

Order: WAA 000 2267 — Place: X

RETURN/TENSION BOTTOM STATION

UNIG - 1EB - DIA5.2M

with emergency drive GR

Unit weight: kg

Date of issue: 2018-07-18 (Export plotted: sbd 07 18 104812)

Original drawing: 200421B10007500.a — Id no.: 11124290

Project no.: 200438900007500

This drawing is intellectual property of DOPPELMAYR SEILBAHNEN GMBH and is transferred to INNOVA PATENT GMBH as of DEC.2014 of the year of making and must not be copied nor utilized in whole or in part without permission and is subject to return upon request.