REAR MAST VIEW A
M 1:25

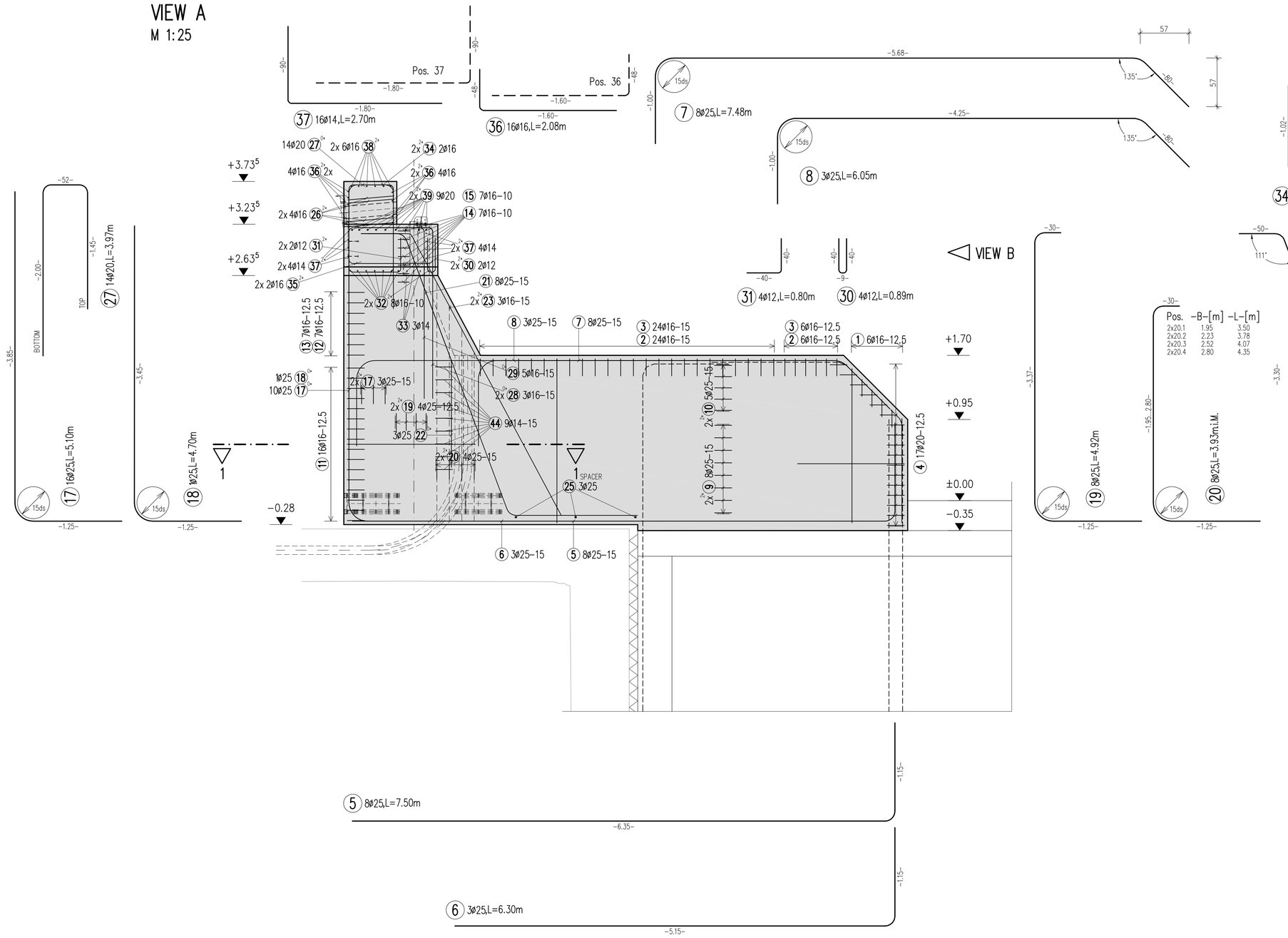

REAR MAST VIEW B
M 1:25

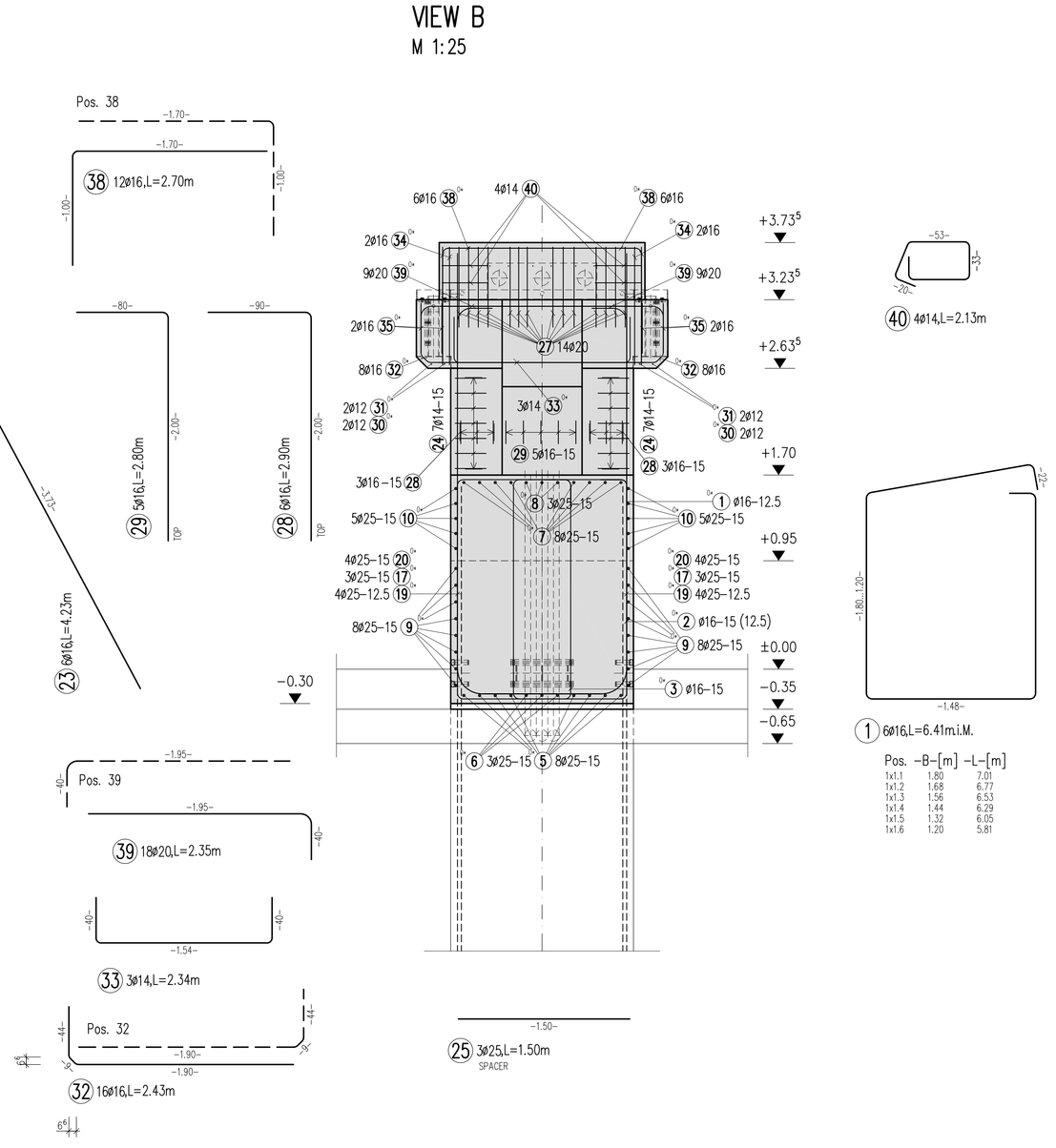

REAR MAST PLAN VIEW
M 1:25

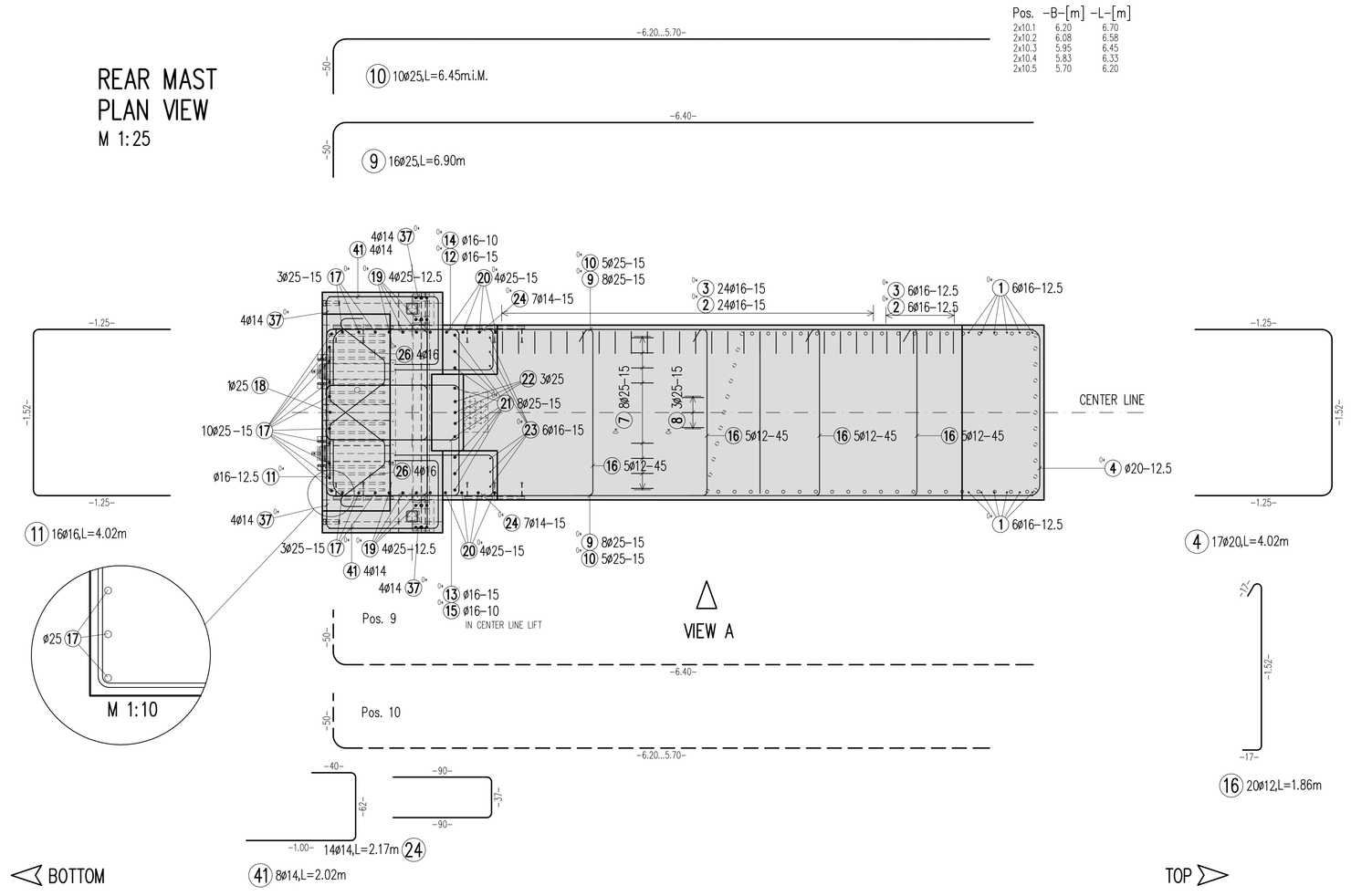

SECTION 1
M 1:25

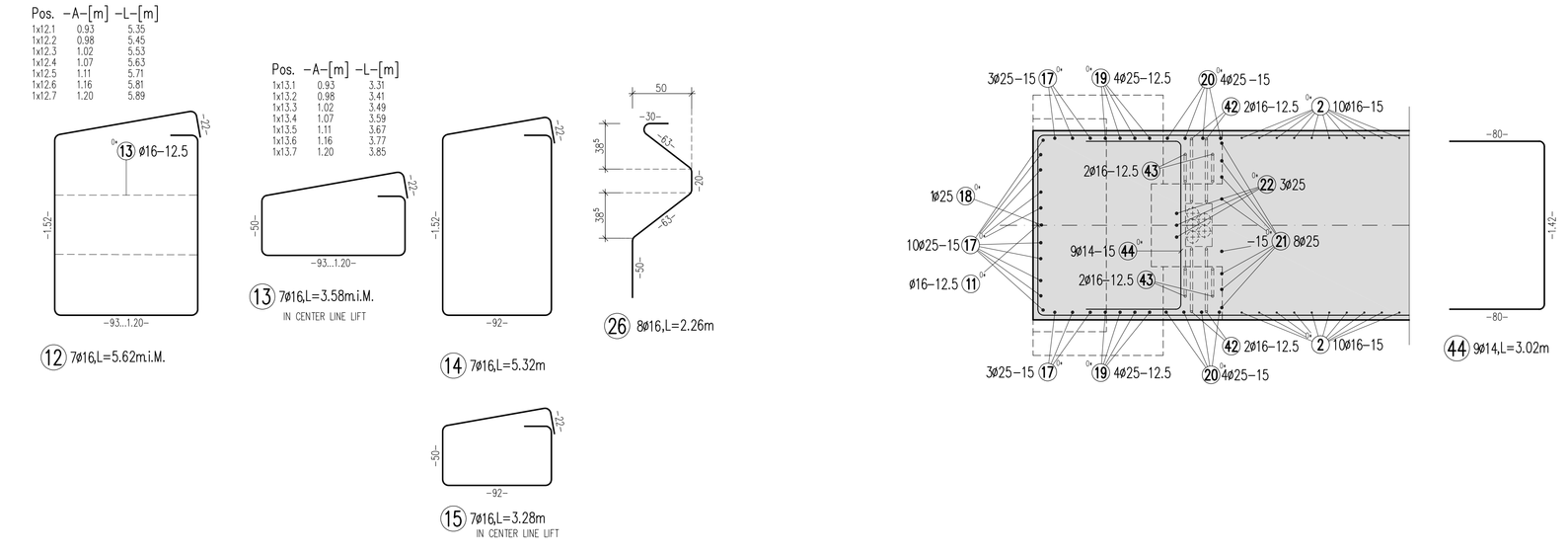

DIMENSIONS IN [cm, m]

±0.00 = 445.00m (LEVEL OF LOADING)

BAR SCHEDULE Steelgrade: STIII

Pos.	No.	d	Length	DI2	DI4	DI6	DI0	DI5
1	6	16	6.41*			38.46		
2	30	16	7.24			217.50		
3	30	16	5.28			158.70		
4	17	20	4.02				68.34	
5	8	25	7.50					60.00
6	3	25	6.30					18.90
7	8	25	7.48					59.84
8	3	25	6.05					18.15
9	16	25	6.90					110.40
10	10	25	6.45*					64.50
11	16	16	4.02			64.32		
12	7	16	5.62*			39.34		
13	7	16	3.58*			25.06		
14	7	16	5.32			37.31		
15	7	16	3.28			23.03		
16	20	12	1.86	37.20				
17	16	25	5.10					81.60
18	1	25	4.70					4.70
19	8	25	4.92					39.36
20	8	25	3.93*					31.44
21	8	25	5.52					44.16
22	3	25	3.33					9.99
23	6	16	4.23			25.38		
24	14	14	2.17		30.38			
25	3	25	1.50					4.50
26	8	16	2.26			18.08		
27	14	20	3.97				55.58	
28	6	16	2.90			17.40		
29	5	16	2.89			14.00		
30	4	12	0.89	3.56				
31	4	12	0.80	3.20				
32	16	16	2.43			38.88		
33	3	14	2.33		6.99			
34	4	16	3.53			14.12		
35	4	16	3.25			13.00		
36	16	16	2.08			33.28		
37	16	14	2.73		43.70			
38	12	16	2.73			32.76		
39	18	20	2.35				42.30	
40	4	14	2.13		8.48			
41	8	14	2.02		16.16			
42	4	16	5.39			21.56		
43	4	16	4.79			19.16		
44	9	14	3.02		27.18			

* = in average

Total lengths	43.96	132.39	856.98	166.02	547.54
kg / m	DI2 0.888	DI4 1.210	DI6 1.580	DI0 2.470	DI5 3.850
kg / m	39.036	160.192	1344.548	410.363	2108.389
Total weight (kg)	4062.368				

- THIS DRAWING IS ONLY VALID IN CONNECTION WITH LAYOUT DRAWING NO.: 20093720E00110if (DOPPELMAYR) 16057/01-10 (ZTB NESSLER)
- MAX. OCCURRING SOIL PRESSURE: BORED CONCRETE PILES
- INADEQUATE SOIL CONDITIONS REQUIRE MODIFCATION BY ENGINEER
- DIMENSIONS TO BE CHECKED
- USE CHAMFERS FOR ALL CONCRETE EDGES ABOVE GROUND

CONCRETE
- MIN. CUBE STRENGTH 28 DAYS: C25/30 N/mm2
- FROST RESISTENT, MAX. PELLET SIZE: 32mm (SHAFT 22mm)

STEEL
- RIBBED BARS, YIELD STRENGTH: 420 N/mm2 - ST III
- CONCRETE COVER TO RE-BARS: FOUNDATION: 5.0cm; WALLS: 4.0cm

TOLERANCES
- HORIZ. LENGTH: ± 2.0 cm
- FOUNDATION LEVELS: ± 1.0 cm
- SURVEYED AXIS: ± 1.0 cm

THIS DRAWING IS ONLY VALID IN CONNECTION WITH LAYOUT DRAWING NO 20093720E00110if (DOPPELMAYR) AND 16057/01d/02d/03b/04b/05b/06b/07b/08c/09b (ZTB NESSLER).

REVISION	DESCRIPTION	DRAWN	DATE
5	No changes (new position bored concrete piles)	LB	20.07.2020
4	Changed situation bottom station, bored concrete piles	LB	05.07.2017

NESSLER ZIVILTECHNIKER GMBH
STATE AUTHORIZED AND CHARTERED ENGINEERING COMPANY FOR CIVIL ENGINEERING
UNTERMARKT 11 A-6020 IMSTITT AUSTRIA
PHONE +43 (0)5612-62202 FAX +43 (0)5612-62202-4 EMAIL: office@nessler-co.at

PROJECT: 8-MGD MTATSMINDA PARK, TBILISI
DOPPELMAYR

PARTS: BOTTOM STATION REAR MAST

TYPE: REINFORCEMENT DRAWING

DRAWN: LB
CHECKED:
RELEASED:
SCALE: 1:25
PLAN-NO.: 16057/10b

SIZE: 1.54x.84m FILE: P:\2016\16057_8...0002367_16057-10b_RE_Rear_Mast_Bottom.dwg DATE: 23.01.2017