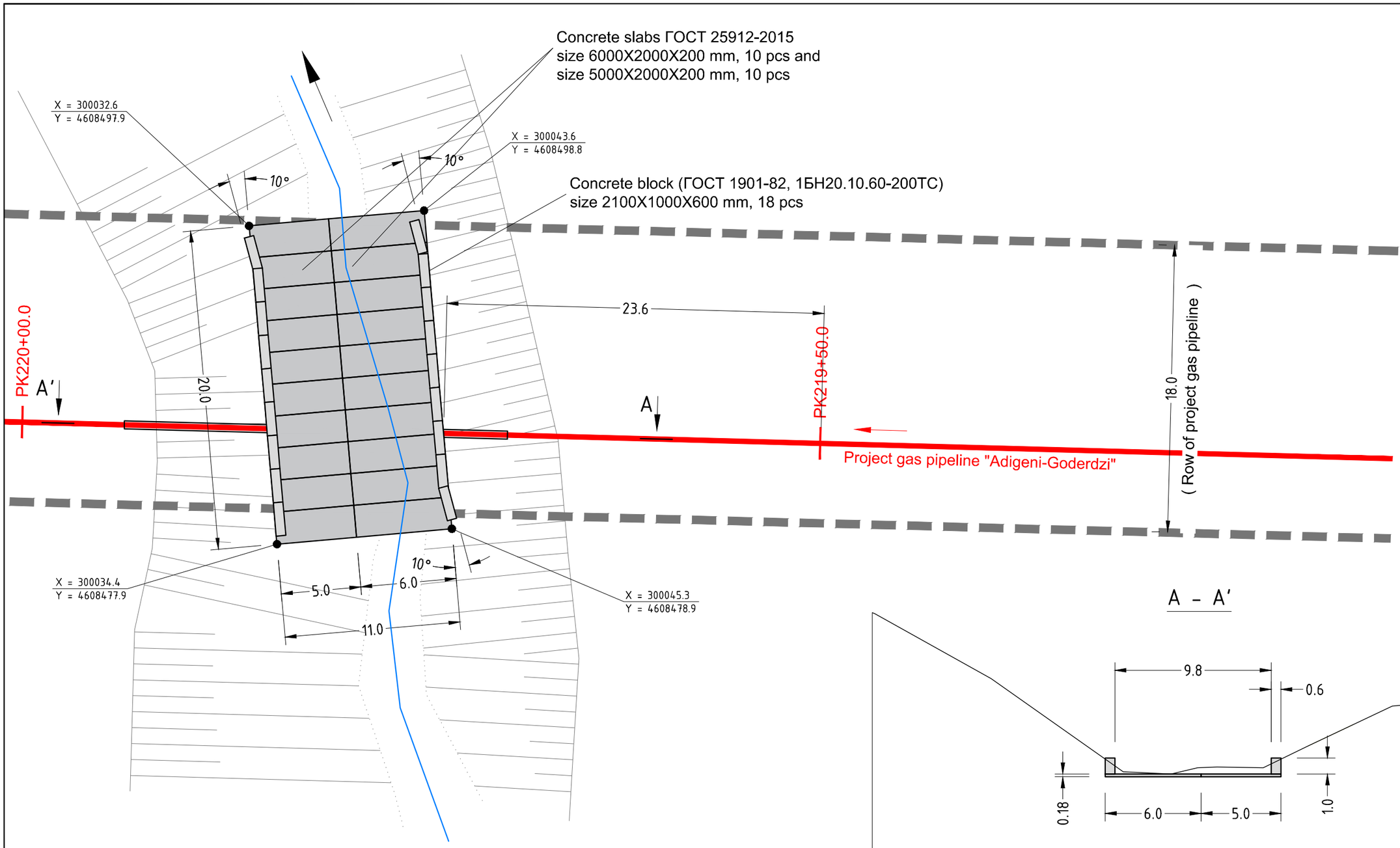

A - A'

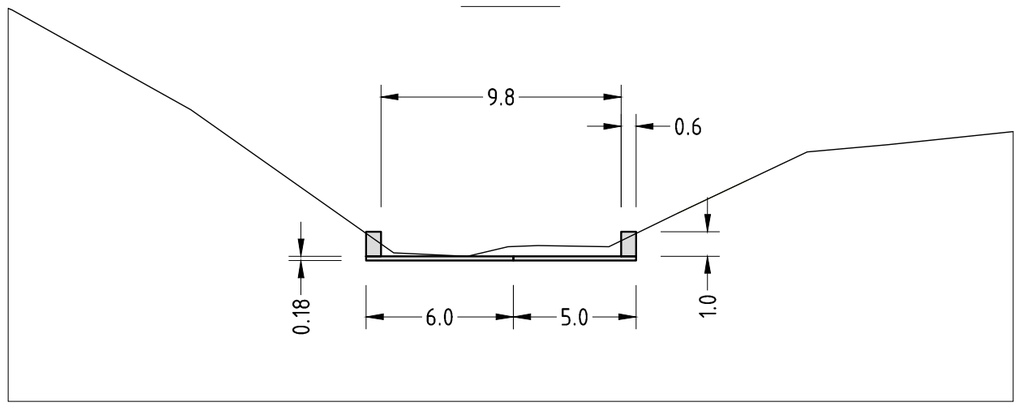

*

- Coordinates given for orientation;
- All sizes given in meters;
- Consider with the drawing ADGO33-GS03-PL-ALS-00044.

Note: The contractor shall ensure purchase and installation of all materials and equipment envisaged by the project and which will not be handovered to contractor by GOGC.

Approved by	T. Javakhishvili		
Checked by	S. Kirakosovi		
Designed by	K. Teliashvili		
Drawn by	A. Farii		
REV.	C01	C02	
თარიღი/DATE	12/11/18	21/01/19	

საქართველოს ნავთობისა და გაზის კორპორაცია
Georgian Oil & Gas Corporation

SCALE:

Adigeni - Goderdzi Gas Main Pipeline Construction Project

Riverbed reinforcement
PK219+50 - PK220+00

DCC NUMBER:	ADGO33-GS03-PL-DTL-00014	SHEET No. ფურცლის №	REV.
No:		1(1)	C02

ფორმატი / PAPER SIZE: ISO A3

\\FILESERVER\DMS\PROJECTS\SOUTH\ADGO33\CAD\DTL\ENG\ADGO33-GS03-PL-DTL-00014_C02.DWG Layout1 Feb 14, 2019-5:18pm