d-2; masStabi 1:50

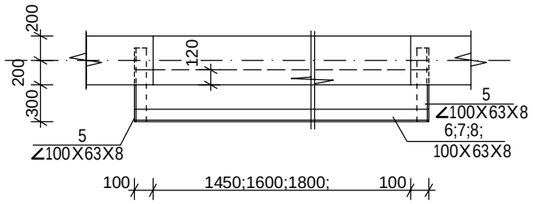

armireba; m 1:50

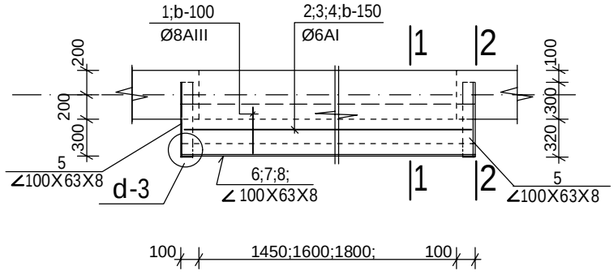

d-3; m. 1:50

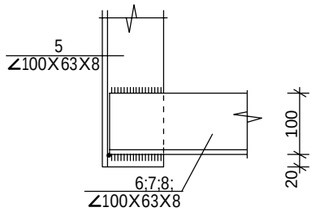

armaturis specifikacia							armaturis amokreba				
dasax.	poz.N	eskizi	Ø da klasi	L mm	n c.	LN m	Ø da klasi	∑LN m	Q kg	betoni V kb.m	betoni marka
r.b. fila-d-2	1	380	Ø8AIII	380	750	285.0	Ø6AI	226.2	50.3	3.1	m-300 B-25
	2	1600	Ø6AI	1600	72	115.2	Ø8AIII	285.0	112.6		
	3	1750	Ø6AI	1750	30	52.5	f-3	133.2	1316.1		
	4	1950	Ø6AI	1950	30	58.5	∑ AIII=114.9kg.				
	5	∠100X63X8	f-3	620	88	54.6	∑ AI=51.4kg.				
	6	∠100X63X8	f-3	1650	24	39.6	∑ f-3=1342.4kg.				
	7	∠100X63X8	f-3	1900	10	19.0					
	8	∠100X63X8	f-3	2000	10	20.0					
	9										

kveTi 1-1; m 1:20

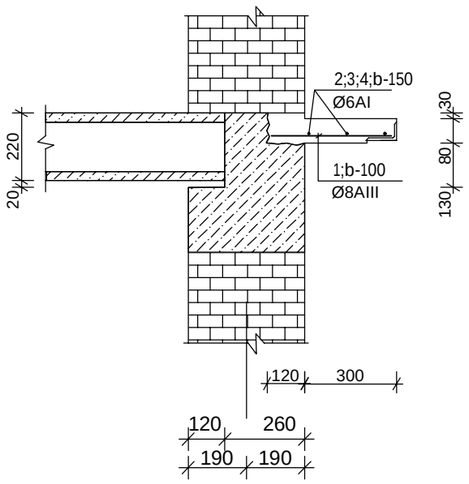

kveTi 2-2; m 1:20

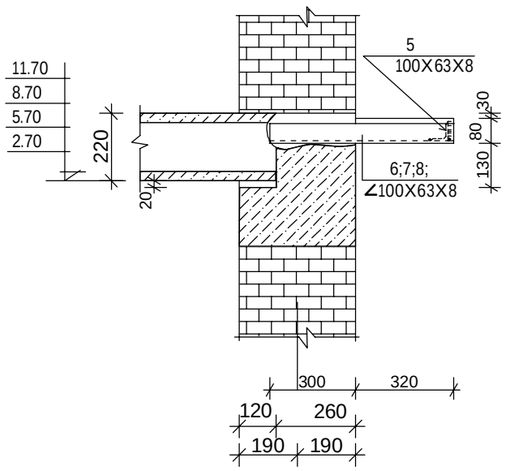

SeniSvnebi

1) SeiburRos kedeli saburRi danadgariT 300mm. siRrmeze 100mm-iani almasis burRiT; Seisvas masSi da Cabetondes #3 kuTxovana; gamoiWras frTxilad betonis sayrdeni niSa. danarCeni samuSaoebi Sesruldes mxolod betonis gamagrebis Semdeg..
2) SeduReba iwarmoos eleqtrodebiT e-46 SeduRebis nakeris sisqe toli unda iyos SesaduRebeli elememtebidan umciresi sisqisa.
3) montaJis Semdeg yvela liTonis elementi gaiwmindos Jangidan da SeiRebos orjer
4) yvela liTonis elementebis zomebi dazustdes adgilze
5) mocemuli furceli ganxiluli iqnas f.#2;3;4;5;6-Tan erTad.

formati **A-3** | Tbilisi 2011 w. | pln. faili saxeli

eqsplikacia:

pirobiTi niSnebi:

SeniSvnebi:

damkveTi:

misamarTi: qalaq wyaltubo Si erisTavis q.#16-Si mdebare Senobis gadagegmarebisa da reabilitaciis proeqti

proeqtis saxelwodeba:

skveris proeqti

Tanamdeboba	gvari	xelmowera	TariRi
direqtori	T.Sengelia		
pr. avtori	z. vaSakiZe		
konstruqtori	vl. RaWava		

S.p.s.

"jeoreseti"

misamarTi:

q.Tvilisi, wereTlis gamz. #67a

masStabi	1:100
TariRi	11.07.2012

detali d-2; kveTebi da specifikaciebi.

stadia	furceli	furclebi
proeqti	k-10	