liTonis zRudaris mowyobis sqema; m 1:20

l.zR.-1; l.zR.-7;

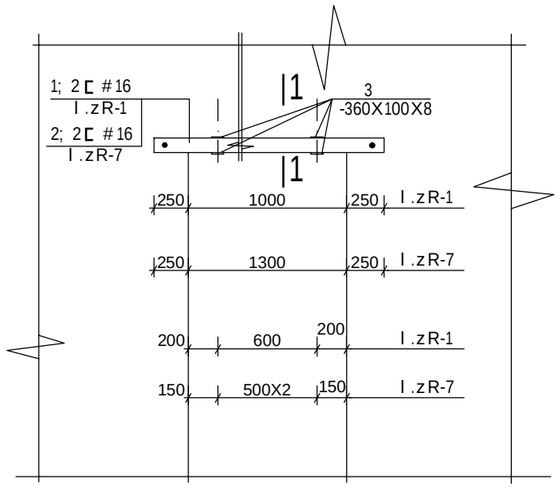

liTonis zRudaris mowyobis sqema; m 1:20

l.zR.-3; l.zR.-6;

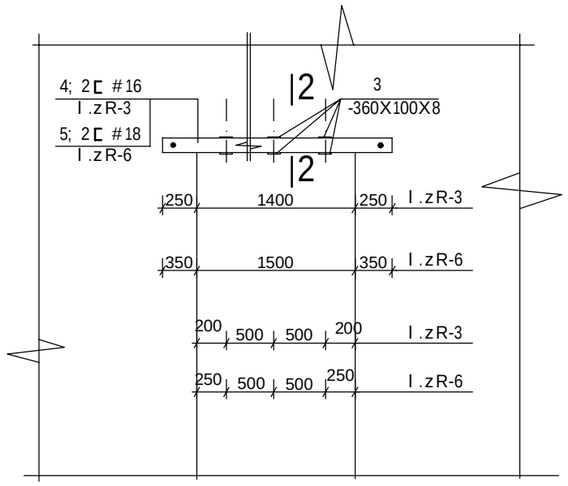

liTonis zRudaris mowyobis sqema; m 1:20

l.zR.-2; l.zR.-5; l.zR.-9;

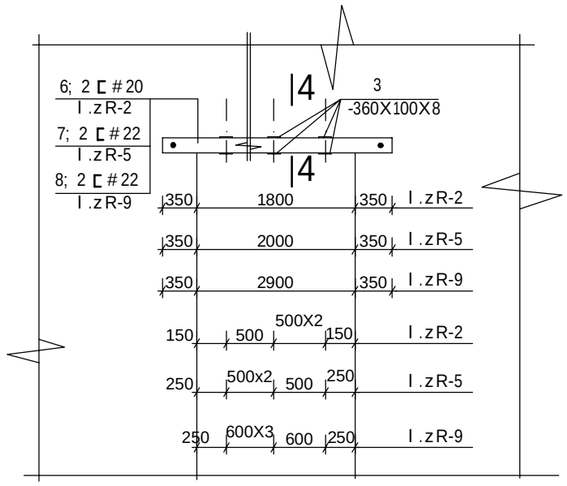

liTonis specifikacia

poz.N	profili	klasi	L mm	N cali	LN m	Q kg
1	[#16	f-3	1500	40	60.0	852.0
2	[#16	f-3	1800	18	32.4	460.1
3	-360X100X8	f-3	360	328	118.1	741.7
4	[#16	f-3	1900	26	49.4	701.5
5	[#18	f-3	2200	20	44.0	717.2
6	[#20	f-3	2500	8	20.0	368.0
7	[#22	f-3	2700	6	16.2	340.2
8	[#22	f-3	3600	6	21.6	453.6
9	1000	Ø8AIII	1000	840	840.0	331.8
10	[#5	f-3	1500	74	111.0	538.4
11	[#12	f-3	2900	2	5.8	60.9
12	-170X100X5	f-3	360	156	26.6	104.5

f-3= 5783.3kg.

Ø8AIII= 338.5kg.

kveTi 1-1; m 1:20

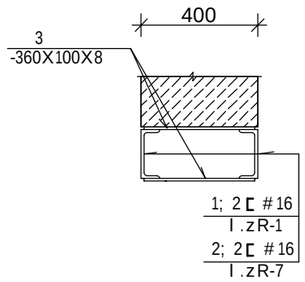

kveTi 3-3; m 1:20

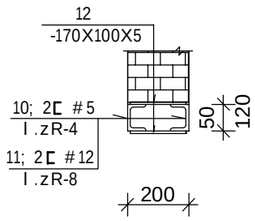

liTonis zRudaris mowyobis sqema; m 1:20

l.zR-4;8

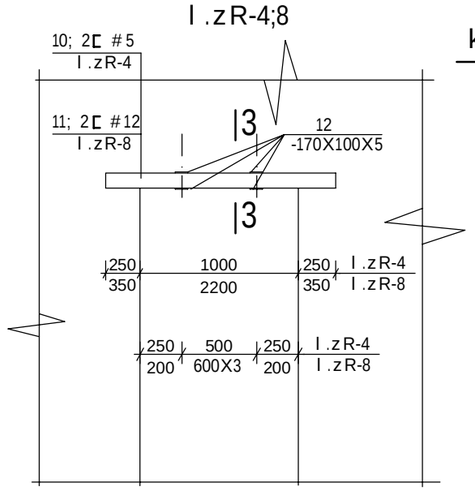

kveTi 2-2; m 1:20

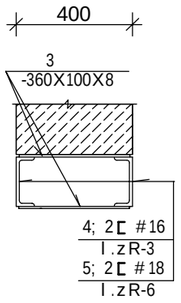

kveTi 4-4; m 1:20

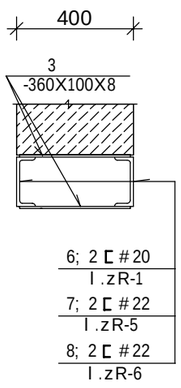

d-1; m. 1:50

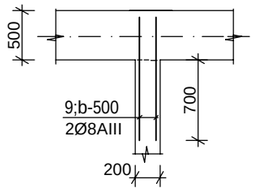

SeniSvnebi

1) liTonis zRudaris saWiro adgilze Casma da damagreba unda moxdes aucileblad
kedlis gamongrevamde.xdolo kedlis gamongreva unda moxdes frTxilad ise rom
ar daziandes kedlis danarCeni nawili. zRudarebis Sesma xdeba sasartyeleblo-
kebs qveviT.
2) SeduReba iwarmoos eleqtrodebiT e-46 SeduRebis nakeris sisqe toli unda iyos
SesaduRebeli elememtebidan umciresi sisqisa.
3) montaJis Semdeg yvela liTonis elementi gaiwmindos Jangidan, Semoekras mavTul-
bade "rabica" da Seilesos.
4) yvela liTonis elementebis zomebi dazustdes adgilze
5) mocemuli furceli ganxilulii iqnas f.#2;3;4;5;6-TanerTad.

formati A-3 | Tbilisi 2011 w. | pln. failis saxeli

eqsplikacia:

pirobiTi niSnebi:

SeniSvnebi:

damkveTi:

misamarTi: qalaqwyaltuboSierisTavis q.#16-Si mdebare Senobis gadagegmarebisa da reabilitaciis proeqti

proeqtis saxelwodeba: skveris proeqti

Tanamdeboba	gvari	xelmowera	TariRi
direqtori	T.Sengelia		
pr. avtori	z. vaSakiZe		
konstruqtori	vl. RaWava		

S.p.s. "jeoreseti"

misamarTi: q.Tvilisi, wereTlis gamz. #67a

masStabi	1:100	
TariRi	11.07.2012	liTonis zRudarebis kveTebi da specifikaciebi. d-1
stadia	furceli	furclebi
proeqti	k-9	