ELCAD-Version 7.1.0
Last used: 02.02.2007
Archive: = / A / A / 1

Project: P:/Anl/GEO/Zestafoni_V0/710/050915_WR_indoor/D00_R1.pro
Symbol library 1: GeorgSym
Symbol library 2: PTD60617
Symbol library 3: H2_60617
Symbol library 4:
Translate file A: a-project.etr
Translate file B: b-Zestafoni_r.etr
Translate file C: C_FB_E.etr
Translate file D: d-Feld_e.etr

CopyRight (C) Siemens AG 2005 All Rights Reserved

V1.0.0 03.02.2005

SIEMENS

Power Transmission and Distribution Group

Electrotechnical documents

Power Transmission Rehabilitation Program II
GSE Georgian State Electric System
FICHTNER
=D00
BB protection
+R1

Power Transmission Rehabilitation Program II
GSE Georgian State Electric System
FICHTNER
220kV BB protection =D00
BB protection
BB protection cubicle +R1

				Date	31.03.05	Power Transmission Rehabilitation Program II	Siemens AG	BB protection		A	=D00
A	workshop rev.	13.09.05	Fra	Drawn	Witting	GSE Georgian State Electric System					+R1
R1	AS BUILT	12.12.06	GRE	Appr.	Wolf	FICHTNER			(3)E50115-A2928-U301-R1		
Rev.	Remarks	Date	Name	Norm		Orig./Repl.f./Repl.by		Cover sheet			

A1
Sheet 1-
1 Sh.

Designation			Producer document No. Customer document No.	Sheet	Sheets	Date	Description	Designed by
A	=D00 +R1	A1	(3)E50115-A2928-U301-R1	1-	1	12.12.06	BB protection Cover sheet	PTD H 2 E
A	=D00 +R1	B1	(3)E50115-A2928-L302-R1	1+	5	12.12.06	BB protection List of documents	PTD H 2 E
A	=D00 +R1	B2	(3)E50115-A2928-L302-R1	2+	5	12.12.06	BB protection List of documents	PTD H 2 E
A	=D00 +R1	B3	(3)E50115-A2928-L302-R1	3+	5	12.12.06	BB protection List of documents	PTD H 2 E
A	=D00 +R1	B4	(3)E50115-A2928-L302-R1	4+	5	12.12.06	BB protection List of documents	PTD H 2 E
A	=D00 +R1	B5	(3)E50115-A2928-L302-R1	5-	5	12.12.06	BB protection List of documents	PTD H 2 E
B	=D00 +R1	AA1	(3)E50115-A2928-S304-R1	1+	3	12.12.06	BB protection Обзор ячейки single line diagram Overview diagram	PTD H 2 E
B	=D00 +R1	AA2	(3)E50115-A2928-S304-R1	2+	3	12.12.06	BB protection Обзор ячейки single line diagram Overview diagram	PTD H 2 E
B	=D00 +R1	AA3	(3)E50115-A2928-S304-R1	3-	3	12.12.06	BB protection Обзор ячейки single line diagram Overview diagram	PTD H 2 E
B	=D00 +R1	BB1	(3)E50115-A2928-S306-R1	1-	1	12.12.06	BB protection Обозначение потенциалов potential designation General explanations	PTD H 2 E
S	=D00 +R1	D1	(3)E50115-A2928-S310-R1	1-	1	12.12.06	BB protection auxilliary voltage 400/230V AC 50Hz Circuit diagram	PTD H 2 E
S	=D00 +R1	G1	(3)E50115-A2928-S312-R1	1-	1	12.12.06	BB protection auxilliary voltage 220V DC Circuit diagram	PTD H 2 E
S	=D00 +R1	NC1	(3)E50115-A2928-S324-R1	1+	20	12.12.06	BB protection Защита СШ busbar protection Circuit diagram	PTD H 2 E
S	=D00 +R1	NC2	(3)E50115-A2928-S324-R1	2+	20	12.12.06	BB protection Защита СШ busbar protection Circuit diagram	PTD H 2 E

ELCAD-Version 7.1.0
Last used: 02.02.2007
Archive: = / A / B / 1
Translate file A: a-project.etr
Translate file B: b-Zestafoni_r.etr
Translate file C: C_FB_E.etr
Translate file D: d-Feld_e.etr
Project: P:/Anl/GEO/Zestafoni_V0/710/050915_WR_indoor/D00_R1.pro
Symbol library 1: GeorgSym
Symbol library 2: PTD60617
Symbol library 3: H2_60617
Symbol library 4:

CopyRight (C) Siemens AG 2005 All Rights Reserved

				Date	31.03.05	Power Transmission Rehabilitation Program II	Siemens AG	BB protection		A	=D00
A	workshop rev.	13.09.05	Fra	Drawn	Witting	GSE Georgian State Electric System					+R1
R1	AS BUILT	12.12.06	GRE	Appr.	Wolf	FICHTNER			(3)E50115-A2928-L302-R1		B1
Rev.	Remarks	Date	Name	Norm		Orig./Repl.f./Repl.by		List of documents			Sheet 1+ 5 Sh.

Designation			Producer document No. Customer document No.	Sheet	Sheets	Date	Description	Designed by
S	=D00 +R1	NC3	(3)E50115-A2928-S324-R1	3+	20	12.12.06	BB protection Защита СШ busbar protection Circuit diagram	PTD H 2 E
S	=D00 +R1	NC4	(3)E50115-A2928-S324-R1	4+	20	12.12.06	BB protection Защита СШ busbar protection Circuit diagram	PTD H 2 E
S	=D00 +R1	NC5	(3)E50115-A2928-S324-R1	5+	20	12.12.06	BB protection Защита СШ busbar protection Circuit diagram	PTD H 2 E
S	=D00 +R1	NC6	(3)E50115-A2928-S324-R1	6+	20	12.12.06	BB protection Защита СШ busbar protection Circuit diagram	PTD H 2 E
S	=D00 +R1	NC7	(3)E50115-A2928-S324-R1	7+	20	12.12.06	BB protection Защита СШ busbar protection Circuit diagram	PTD H 2 E
S	=D00 +R1	NC8	(3)E50115-A2928-S324-R1	8+	20	12.12.06	BB protection Защита СШ busbar protection Circuit diagram	PTD H 2 E
S	=D00 +R1	NC9	(3)E50115-A2928-S324-R1	9+	20	12.12.06	BB protection Защита СШ busbar protection Circuit diagram	PTD H 2 E
S	=D00 +R1	NC10	(3)E50115-A2928-S324-R1	10+	20	12.12.06	BB protection Защита СШ busbar protection Circuit diagram	PTD H 2 E
S	=D00 +R1	NC11	(3)E50115-A2928-S324-R1	11+	20	12.12.06	BB protection Защита СШ busbar protection Circuit diagram	PTD H 2 E
S	=D00 +R1	NC12	(3)E50115-A2928-S324-R1	12+	20	12.12.06	BB protection Защита СШ busbar protection Circuit diagram	PTD H 2 E
S	=D00 +R1	NC13	(3)E50115-A2928-S324-R1	13+	20	12.12.06	BB protection Защита СШ busbar protection Circuit diagram	PTD H 2 E
S	=D00 +R1	NC14	(3)E50115-A2928-S324-R1	14+	20	12.12.06	BB protection Защита СШ busbar protection Circuit diagram	PTD H 2 E
S	=D00 +R1	NC15	(3)E50115-A2928-S324-R1	15+	20	12.12.06	BB protection Защита СШ busbar protection Circuit diagram	PTD H 2 E
S	=D00 +R1	NC16	(3)E50115-A2928-S324-R1	16+	20	12.12.06	BB protection Защита СШ busbar protection Circuit diagram	PTD H 2 E

ELCAD-Version 7.1.0
Last used: 02.02.2007
Archive: = / A / B / 2

Project: P:/Anl/GEO/Zestafoni_V0/710/050915_WR_indoor/D00_R1.pro
Symbol library 1: GeorgSym
Symbol library 2: PTD60617
Symbol library 3: H2_60617
Symbol library 4:

Translate file A: a-project.etr
Translate file B: b-Zestafoni_r.etr
Translate file C: C_FB_E.etr
Translate file D: d-Feld_e.etr

CopyRight (C) Siemens AG 2005 All Rights Reserved

				Date	31.03.05	Power Transmission Rehabilitation Program II	Siemens AG	BB protection		A	=D00
A	workshop rev.	13.09.05	Fra	Drawn	Witting	GSE Georgian State Electric System					+R1
R1	AS BUILT	12.12.06	GRE	Appr.	Wolf	FICHTNER			(3)E50115-A2928-L302-R1		B2
Rev.	Remarks	Date	Name	Norm		Orig./Repl.f./Repl.by		List of documents			Sheet 2+ 5 Sh.

Designation			Producer document No. Customer document No.	Sheet	Sheets	Date	Description	Designed by
S	=D00 +R1	NC17	(3)E50115-A2928-S324-R1	17+	20	12.12.06	BB protection Защита СШ busbar protection Circuit diagram	PTD H 2 E
S	=D00 +R1	NC18	(3)E50115-A2928-S324-R1	18+	20	12.12.06	BB protection Защита СШ busbar protection Circuit diagram	PTD H 2 E
S	=D00 +R1	NC19	(3)E50115-A2928-S324-R1	19+	20	12.12.06	BB protection Защита СШ busbar protection Circuit diagram	PTD H 2 E
S	=D00 +R1	NC20	(3)E50115-A2928-S324-R1	20-	20	12.12.06	BB protection Защита СШ busbar protection Circuit diagram	PTD H 2 E
S	=D00 +R1	R1	(3)E50115-A2928-S336-R1	1-	1	12.12.06	BB protection Сигналы alarms Circuit diagram	PTD H 2 E
S	=D00 +R1	ZN1	(3)E50115-A2928-S356-R1	1+	10	12.12.06	BB protection Защита protection Circuit diagram	PTD H 2 E
S	=D00 +R1	ZN2	(3)E50115-A2928-S356-R1	2+	10	12.12.06	BB protection Защита protection Circuit diagram	PTD H 2 E
S	=D00 +R1	ZN3	(3)E50115-A2928-S356-R1	3+	10	12.12.06	BB protection Защита protection Circuit diagram	PTD H 2 E
S	=D00 +R1	ZN4	(3)E50115-A2928-S356-R1	4+	10	12.12.06	BB protection Защита protection Circuit diagram	PTD H 2 E
S	=D00 +R1	ZN5	(3)E50115-A2928-S356-R1	5+	10	12.12.06	BB protection Защита protection Circuit diagram	PTD H 2 E
S	=D00 +R1	ZN6	(3)E50115-A2928-S356-R1	6+	10	12.12.06	BB protection Защита protection Circuit diagram	PTD H 2 E
S	=D00 +R1	ZN7	(3)E50115-A2928-S356-R1	7+	10	12.12.06	BB protection Защита protection Circuit diagram	PTD H 2 E
S	=D00 +R1	ZN8	(3)E50115-A2928-S356-R1	8+	10	12.12.06	BB protection Защита protection Circuit diagram	PTD H 2 E
S	=D00 +R1	ZN9	(3)E50115-A2928-S356-R1	9+	10	12.12.06	BB protection Защита protection Circuit diagram	PTD H 2 E

ELCAD-Version 7.1.0
Last used: 02.02.2007
Archive: = / A / B / 3
Translate file A: a-project.etr
Translate file B: b-Zestafoni_r.etr
Translate file C: C_FB_E.etr
Translate file D: d-Feld_e.etr
Project: P:/Anl/GEO/Zestafoni_V0/710/050915_WR_indoor/D00_R1.pro
Symbol library 1: GeorgSym
Symbol library 2: PTD60617
Symbol library 3: H2_60617
Symbol library 4:

CopyRight (C) Siemens AG 2005 All Rights Reserved

				Date	31.03.05	Power Transmission Rehabilitation Program II	Siemens AG	BB protection		A	=D00
A	workshop rev.	13.09.05	Fra	Drawn	Witting	GSE Georgian State Electric System					+R1
R1	AS BUILT	12.12.06	GRE	Appr.	Wolf	FICHTNER			(3)E50115-A2928-L302-R1		
Rev.	Remarks	Date	Name	Norm		Orig./Repl.f./Repl.by		List of documents			

B3
Sheet 3+
5 Sh.

Designation			Producer document No. / Customer document No.	Sheet	Sheets	Date	Description	Designed by
S	=D00 +R1	ZN10	(3)E50115-A2928-S356-R1	10-	10	12.12.06	BB protection Защита protection Circuit diagram	PTD H 2 E
S	=D00 +R1	ZY1	(3)E50115-A2928-S359-R1	1-	1	12.12.06	BB protection Вспомогательное оборуд. auxiliary equipment Circuit diagram	PTD H 2 E
T	=D00 +R1	ZZ	(3)E50115-A2928-L361-R1	-	7	12.12.06	BB protection Спецификация list of equipment List of equipment	PTD H 2 E
U	=D00 +R1	US1	(3)E50115-A2928-V366-R1	1+	2	12.12.06	BB protection Структурные чертежи arrangement drawings Arrangement drawing	PTD H 2 E
U	=D00 +R1	US2	(3)E50115-A2928-V366-R1	2-	2	12.12.06	BB protection Структурные чертежи arrangement drawings Arrangement drawing	PTD H 2 E
V	=D00 +R1	VS1	(3)E50115-A2928-S371-R1	1+	23	12.12.06	BB protection =D00+R1-X001 Connection table	PTD H 2 E
V	=D00 +R1	VS2	(3)E50115-A2928-S371-R1	2+	23	12.12.06	BB protection =D00+R1-X100 Connection table	PTD H 2 E
V	=D00 +R1	VS3	(3)E50115-A2928-S371-R1	3+	23	12.12.06	BB protection =D00+R1-X110 Connection table	PTD H 2 E
V	=D00 +R1	VS4	(3)E50115-A2928-S371-R1	4+	23	12.12.06	BB protection =D00+R1-X120 Connection table	PTD H 2 E
V	=D00 +R1	VS5	(3)E50115-A2928-S371-R1	5+	23	12.12.06	BB protection =D00+R1-X202 Connection table	PTD H 2 E
V	=D00 +R1	VS6	(3)E50115-A2928-S371-R1	6+	23	12.12.06	BB protection =D00+R1-X204 Connection table	PTD H 2 E
V	=D00 +R1	VS7	(3)E50115-A2928-S371-R1	7+	23	12.12.06	BB protection =D00+R1-X206 Connection table	PTD H 2 E
V	=D00 +R1	VS8	(3)E50115-A2928-S371-R1	8+	23	12.12.06	BB protection =D00+R1-X207 Connection table	PTD H 2 E
V	=D00 +R1	VS9	(3)E50115-A2928-S371-R1	9+	23	12.12.06	BB protection =D00+R1-X208 Connection table	PTD H 2 E

CopyRight (C) Siemens AG 2005 All Rights Reserved

ELCAD-Version 7.1.0
Last used: 02.02.2007
Archive: = / A / B / 4
Project: P:/Anl/GEO/Zestafoni_VO/710/050915_WR_indoor/D00_R1.pro
Translate file A: a-project.etr
Translate file B: b-Zestafoni_r.etr
Translate file C: C_FB_E.etr
Translate file D: d-Feld_e.etr
Symbol library 1: GeorgSym
Symbol library 2: PTD60617
Symbol library 3: H2_60617
Symbol library 4:

Designation			Producer document No. Customer document No.	Sheet	Sheets	Date	Description	Designed by
V	=D00 +R1	VS10	(3)E50115-A2928-S371-R1	10+	23	12.12.06	BB protection =D00+R1-X209 Connection table	PTD H 2 E
V	=D00 +R1	VS11	(3)E50115-A2928-S371-R1	11+	23	12.12.06	BB protection =D00+R1-X210 Connection table	PTD H 2 E
V	=D00 +R1	VS12	(3)E50115-A2928-S371-R1	12+	23	12.12.06	BB protection =D00+R1-X211 Connection table	PTD H 2 E
V	=D00 +R1	VS13	(3)E50115-A2928-S371-R1	13+	23	12.12.06	BB protection =D00+R1-X212 Connection table	PTD H 2 E
V	=D00 +R1	VS14	(3)E50115-A2928-S371-R1	14+	23	12.12.06	BB protection =D00+R1-X331 Connection table	PTD H 2 E
V	=D00 +R1	VS15	(3)E50115-A2928-S371-R1	15+	23	12.12.06	BB protection =D00+R1-X602 Connection table	PTD H 2 E
V	=D00 +R1	VS16	(3)E50115-A2928-S371-R1	16+	23	12.12.06	BB protection =D00+R1-X604 Connection table	PTD H 2 E
V	=D00 +R1	VS17	(3)E50115-A2928-S371-R1	17+	23	12.12.06	BB protection =D00+R1-X606 Connection table	PTD H 2 E
V	=D00 +R1	VS18	(3)E50115-A2928-S371-R1	18+	23	12.12.06	BB protection =D00+R1-X607 Connection table	PTD H 2 E
V	=D00 +R1	VS19	(3)E50115-A2928-S371-R1	19+	23	12.12.06	BB protection =D00+R1-X608 Connection table	PTD H 2 E
V	=D00 +R1	VS20	(3)E50115-A2928-S371-R1	20+	23	12.12.06	BB protection =D00+R1-X609 Connection table	PTD H 2 E
V	=D00 +R1	VS21	(3)E50115-A2928-S371-R1	21+	23	12.12.06	BB protection =D00+R1-X610 Connection table	PTD H 2 E
V	=D00 +R1	VS22	(3)E50115-A2928-S371-R1	22+	23	12.12.06	BB protection =D00+R1-X611 Connection table	PTD H 2 E
V	=D00 +R1	VS23	(3)E50115-A2928-S371-R1	23-	23	12.12.06	BB protection =D00+R1-X612 Connection table	PTD H 2 E

ELCAD-Version 7.1.0
Last used: 02.02.2007
Archive: = / A / B / 5
Translate file A: a-project.etr
Translate file B: b-Zestafoni_r.etr
Translate file C: C_FB_E.etr
Translate file D: d-Feld_e.etr
Project: P:/Anl/GEO/Zestafoni_V0/710/050915_WR_indoor/D00_R1.pro
Symbol library 1: GeorgSym
Symbol library 2: PTD60617
Symbol library 3: H2_60617
Symbol library 4:

CopyRight (C) Siemens AG 2005 All Rights Reserved

				Date	31.03.05	Power Transmission Rehabilitation Program II	Siemens AG	BB protection		A	=D00
A	workshop rev.	13.09.05	Fra	Drawn	Witting	GSE Georgian State Electric System					+R1
R1	AS BUILT	12.12.06	GRE	Appr.	Wolf	FICHTNER			(3)E50115-A2928-L302-R1		B5
Rev.	Remarks	Date	Name	Norm		Orig./Repl.f./Repl.by		List of documents			Sheet 5- 5 Sh.

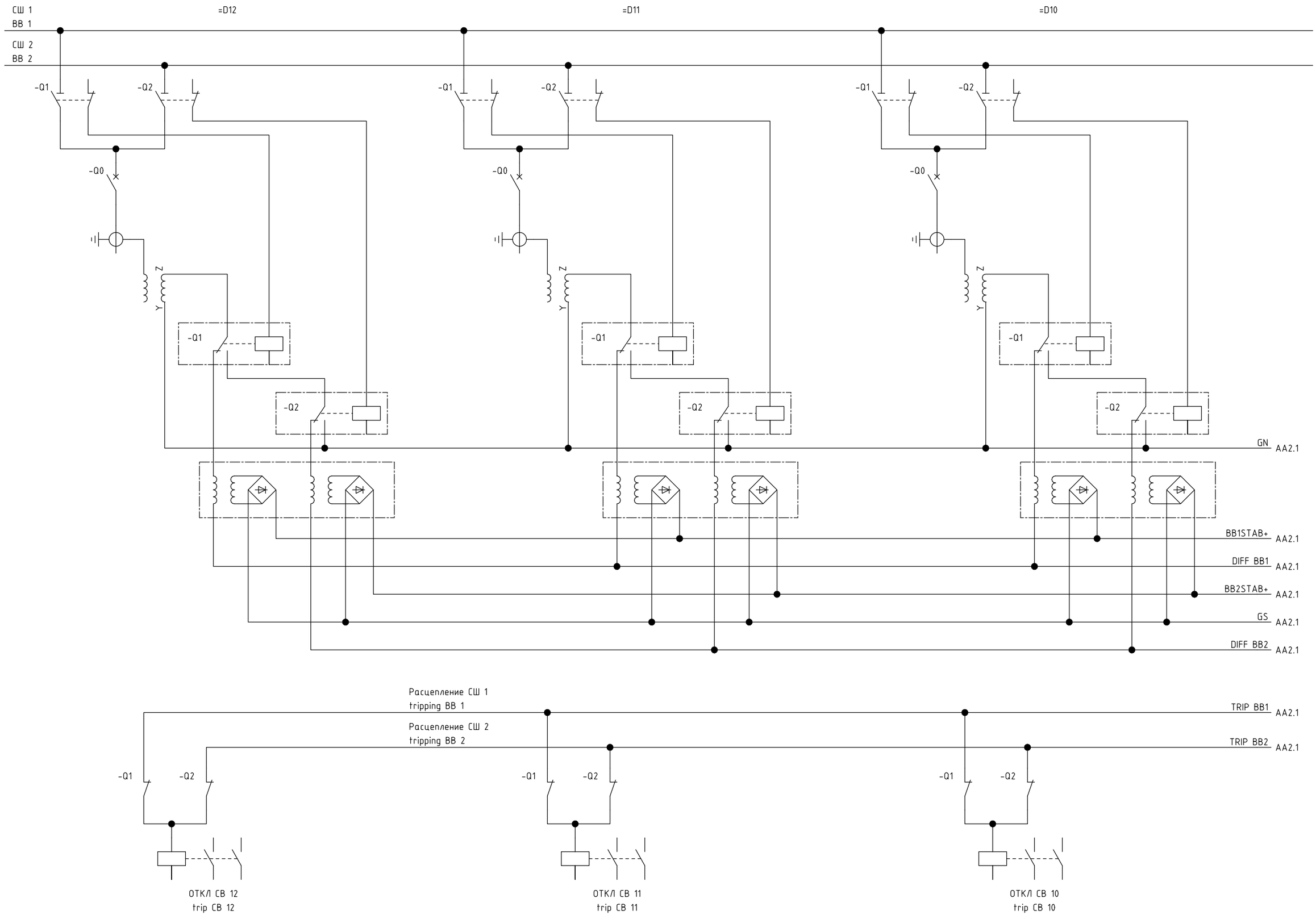

CopyRight (C) Siemens AG 2005 All Rights Reserved

ELCAD-Version 7.1.0
Last used: 02.02.2007
Archive: = / B / AA / 1

Project: P:/Anl/GEO/Zestafoni_V0/710/050915_WR_indoor/D00_R1.pro
Symbol library 1: GeorgSym
Symbol library 2: PTD60617
Symbol library 3: H2_60617
Symbol library 4:

Translate file A: a-project.etr
Translate file B: b-Zestafoni_r.etr
Translate file C: C_FB_E.etr
Translate file D: d-Feld_e.etr

V1.0.0 14.06.2004

				Date	31.03.05	Power Transmission Rehabilitation Program II	Siemens AG	BB protection	B	=D00
A	workshop rev.	13.09.05	Fra	Drawn	Witting	GSE Georgian State Electric System		Обзор ячейки		+R1 AA1
R1	AS BUILT	12.12.06	GRE	Appr.	Wolf	FICHTNER		single line diagram	(3)E50115-A2928-S304-R1	Sheet 1+
Rev.	Remarks	Date	Name	Norm		Orig./Repl.f./Repl.by		Overview diagram		3 Sh.

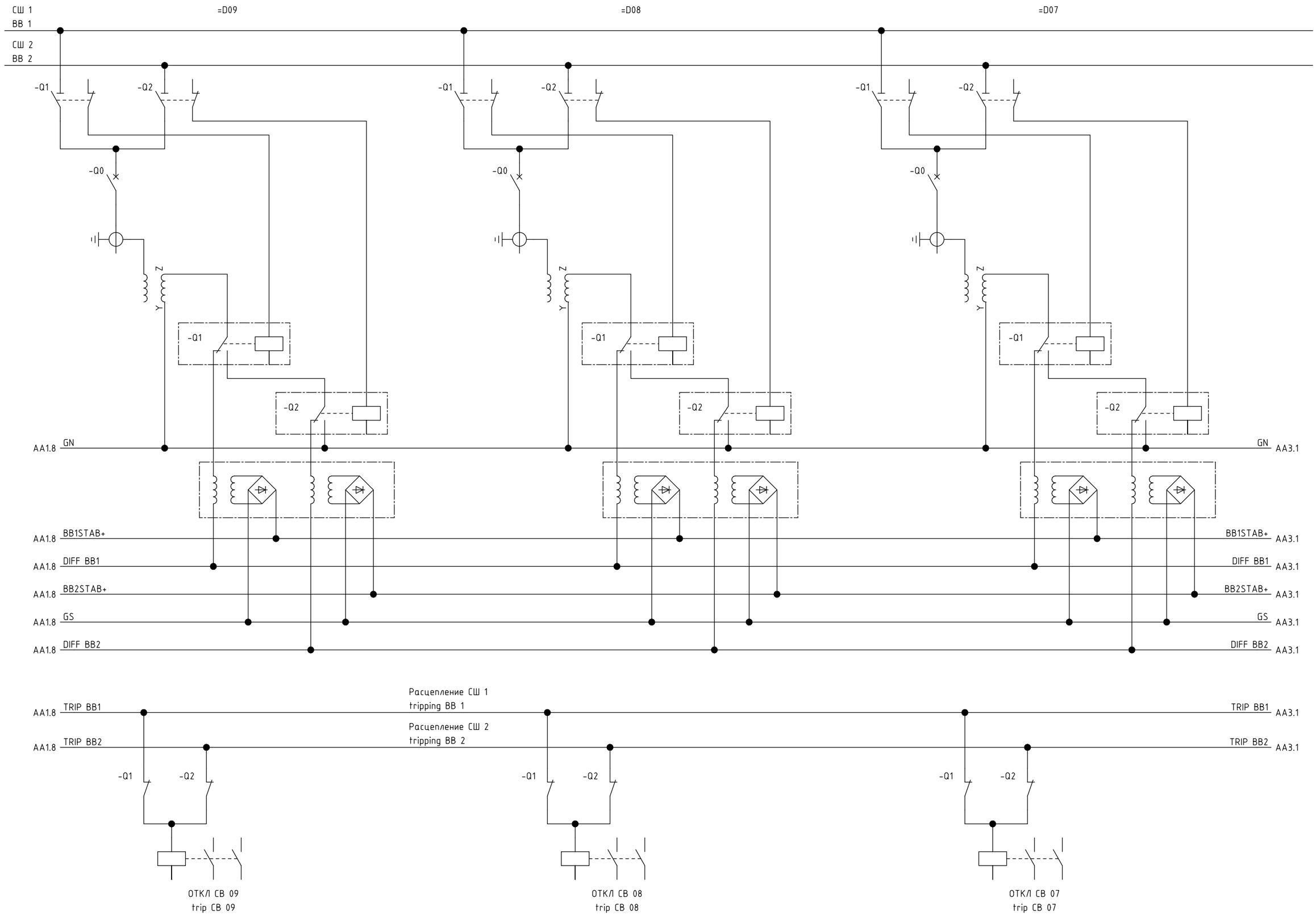

CopyRight (C) Siemens AG 2005 All Rights Reserved

ELCAD-Version 7.1.0
Last used: 02.02.2007
Archive: = / B / AA / 2

Project: P:/Anl/GEO/Zestafoni_V0/710/050915_WR_indoor/D00_R1.pro
Symbol library 1: GeorgSym
Symbol library 2: PTD60617
Symbol library 3: H2_60617
Symbol library 4:

Translate file A: a-project.etr
Translate file B: b-Zestafoni_r.etr
Translate file C: C_FB_E.etr
Translate file D: d-Feld_e.etr

V1.0.0 14.06.2004

				Date	31.03.05	Power Transmission Rehabilitation Program II	Siemens AG	BB protection	B	=D00
A	workshop rev.	13.09.05	Fra	Drawn	Witting	GSE Georgian State Electric System		Обзор ячейки		+R1 AA2
R1	AS BUILT	12.12.06	GRE	Appr.	Wolf	FICHTNER		single line diagram	(3)E50115-A2928-S304-R1	Sheet 2+
Rev.	Remarks	Date	Name	Norm		Orig./Repl.f./Repl.by		Overview diagram		3 Sh.

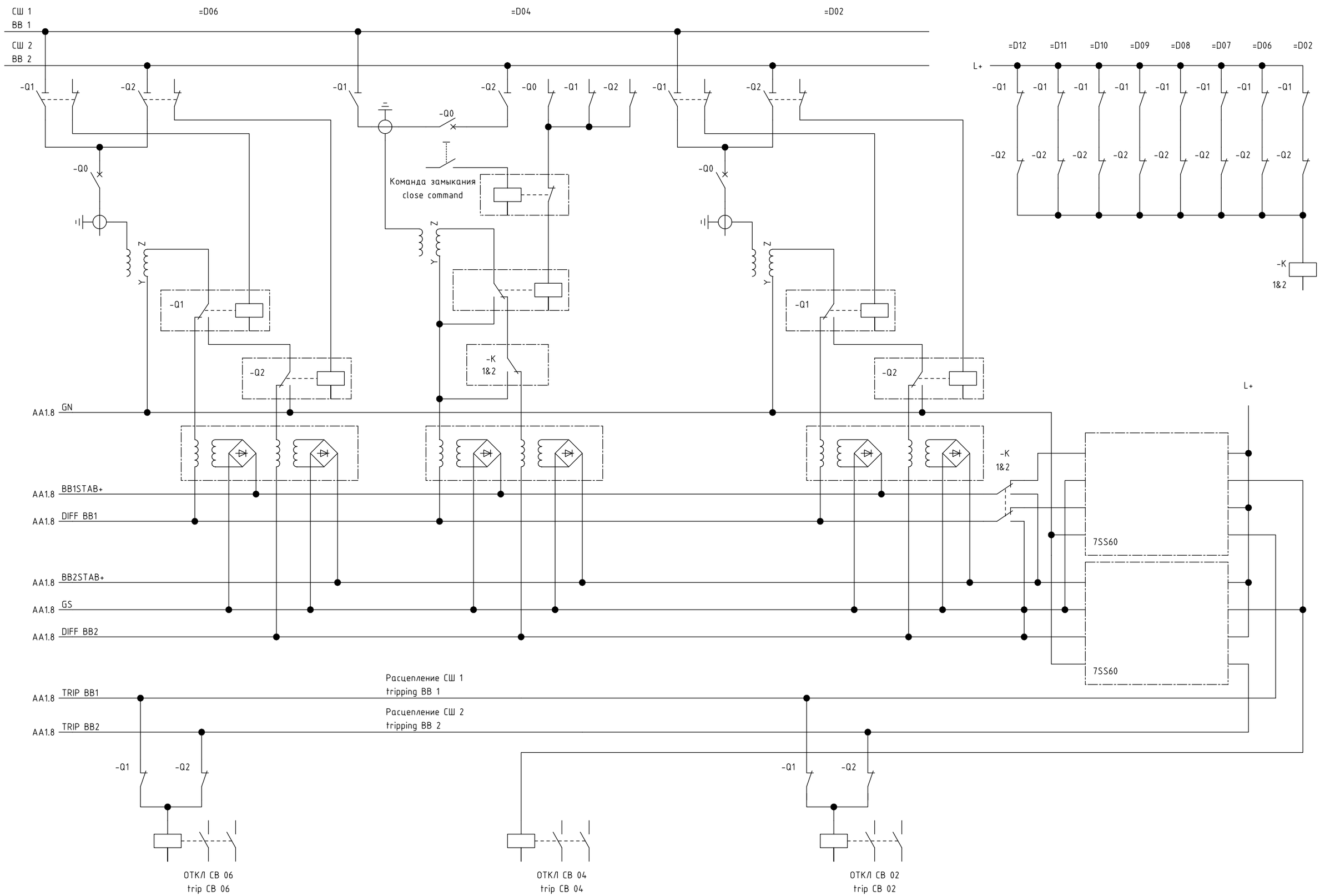

ELCAD-Version 7.1.0
Last used: 02.02.2007
Archive: = / B / AA / 3

Project: P:/Anl/GEO/Zestafoni_VO/710/050915_WR_indoor/D00_R1.pro
Translate file A: a-project.etr
Translate file B: b-Zestafoni_r.etr
Translate file C: C_FB_E.etr
Translate file D: d-Feld_e.etr
Symbol library 1: GeorgSym
Symbol library 2: PTD60617
Symbol library 3: H2_60617
Symbol library 4:

CopyRight (C) Siemens AG 2005 All Rights Reserved

V1.0.0 14.06.2004

				Date	31.03.05	Power Transmission Rehabilitation Program II	Siemens AG	BB protection	B	=D00
A	workshop rev.	13.09.05	Fra	Drawn	Witting	GSE Georgian State Electric System		Обзор ячейки		+R1 AA3
R1	AS BUILT	12.12.06	GRE	Appr.	Wolf	FICHTNER		single line diagram	(3)E50115-A2928-S304-R1	Sheet 3-
Rev.	Remarks	Date	Name	Norm		Orig./Repl.f./Repl.by		Overview diagram		3 Sh.

400/230V ~50Hz		220V DC	
L1, L2, L3, N, PE	Электропитание (Нагрев, Освещение, Розетка) power supply (heating, illumination, socket)	1L+, 1L-	питание 1 power supply 1
		2L+, 2L-	питание 2 power supply 2
		31L+, 31L-	защита 1 protection 1

CopyRight (C) Siemens AG 2005 All Rights Reserved

ELCAD-Version 7.1.0
Last used: 02.02.2007
Archive: = / B / BB / 1
Project: P:/Anl/GEO/Zestafoni_VO/710/050915_WR_indoor/D00_R1.pro
Translate file A: a-project.etr
Translate file B: b-Zestafoni_r.etr
Translate file C: C_FB_E.etr
Translate file D: d-Feld_e.etr
Symbol library 1: GeorgSym
Symbol library 2: PTD60617
Symbol library 3: H2_60617
Symbol library 4:
V1.0.0 14.06.2004

				Date	31.03.05	Power Transmission Rehabilitation Program II	Siemens AG	BB protection		B	=D00
A	workshop rev.	13.09.05	Fra	Drawn	Witting	GSE Georgian State Electric System		Обозначение потенциалов			+R1
R1	AS BUILT	12.12.06	GRE	Appr.	Wolf	FICHTNER		potential designation	(3)E50115-A2928-S306-R1		BB1
Rev.	Remarks	Date	Name	Norm		Orig./Repl.f./Repl.by		General explanations			Sheet 1- 1 Sh.

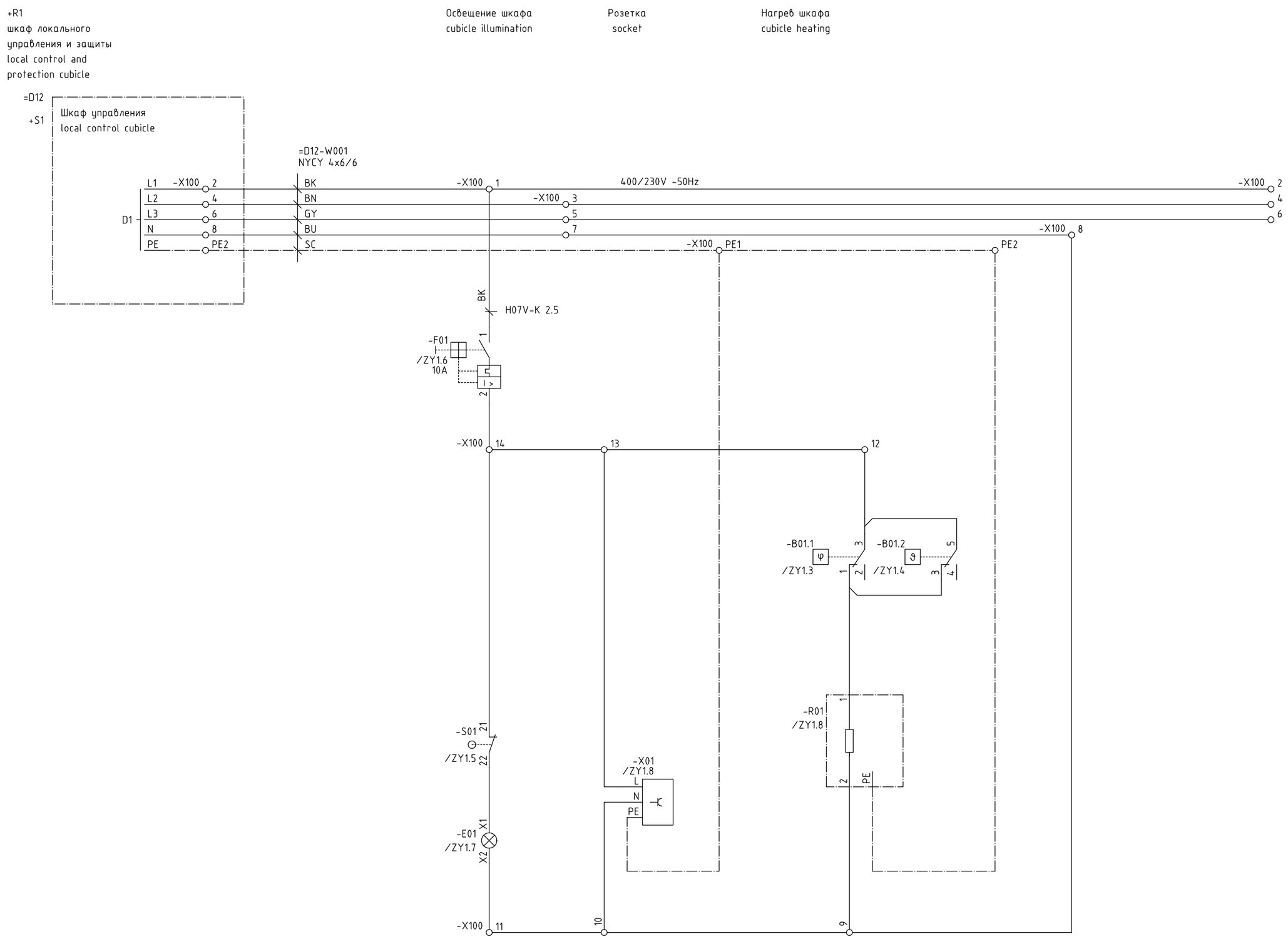

Вся проводка H07V-K 1,5 BK ,в случае отсутствия другой спецификации
wiring H07V-K 1,5 BK , if not otherwise specified

				Date	31.03.05	Power Transmission Rehabilitation Program II	Siemens AG	BB protection	S	=D00
A	workshop rev.	13.09.05	Fra	Drawn	Witting	GSE Georgian State Electric System				+R1 D1
R1	AS BUILT	12.12.06	GRE	Appr.	Wolf	FICHTNER		auxilliary voltage 400/230V AC 50Hz	(3)E50115-A2928-S310-R1	Sheet 1-
Rev.	Remarks	Date	Name	Norm		Orig./Repl.f./Repl.by		Circuit diagram		1 Sh.

CopyRight (C) Siemens AG 2005 All Rights Reserved

ELCAD-Version 7.1.0
Last used: 02.02.2007
File name: 000163
Archive: = / S / D / 1
Project: P:/Anl/GEO/Zestafoni_V0/710/050915_WR_indoor/D00_R1.pro
Symbol library 1: GeorgSym
Symbol library 2: PTD60617
Symbol library 3: H2_60617
Symbol library 4:
Translate file A: a-project.etr
Translate file B: b-Zestafoni_r.etr
Translate file C: C_FB_E.etr
Translate file D: d-Feld_e.etr
V1.0.0 14.06.2004

+R1
шкаф локального
управления и защиты
local control and
protection cubicle

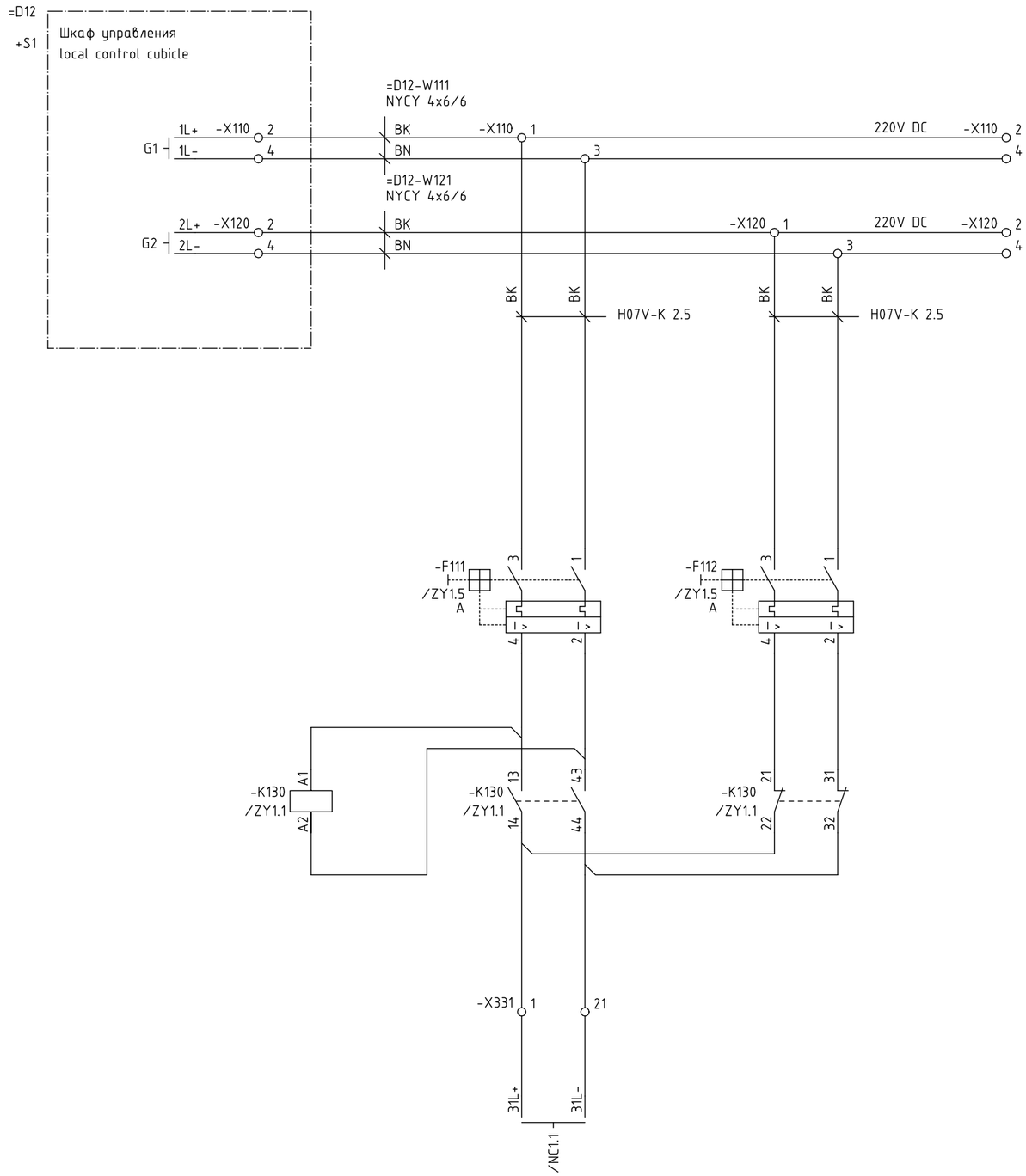

Вся проводка H07V-K 1,5 BK ,в случае отсутствия другой спецификации
wiring H07V-K 1,5 BK , if not otherwise specified

				Date	31.03.05	Power Transmission Rehabilitation Program II	Siemens AG	BB protection		S	=D00
A	workshop rev.	13.09.05	Fra	Drawn	Witting	GSE Georgian State Electric System					+R1
R1	AS BUILT	12.12.06	GRE	Appr.	Wolf	FICHTNER		auxilliary voltage 220V DC	(3)E50115-A2928-S312-R1		G1
Rev.	Remarks	Date	Name	Norm		Orig./Repl.f./Repl.by		Circuit diagram			Sheet 1- 1 Sh.

ELCAD-Version 7.1.0
Last used: 02.02.2007
Archive: = / S / G / 1

Project: P:/Anl/GEO/Zestafoni_V0/710/050915_WR_indoor/D00_R1.pro
Symbol library 1: GeorgSym
Symbol library 2: PTD60617
Symbol library 3: H2_60617
Symbol library 4:
Translate file A: a-project.etr
Translate file B: b-Zestafoni_r.etr
Translate file C: C_FB_E.etr
Translate file D: d-Feld_e.etr

CopyRight (C) Siemens AG 2005 All Rights Reserved
V1.0.0 14.06.2004

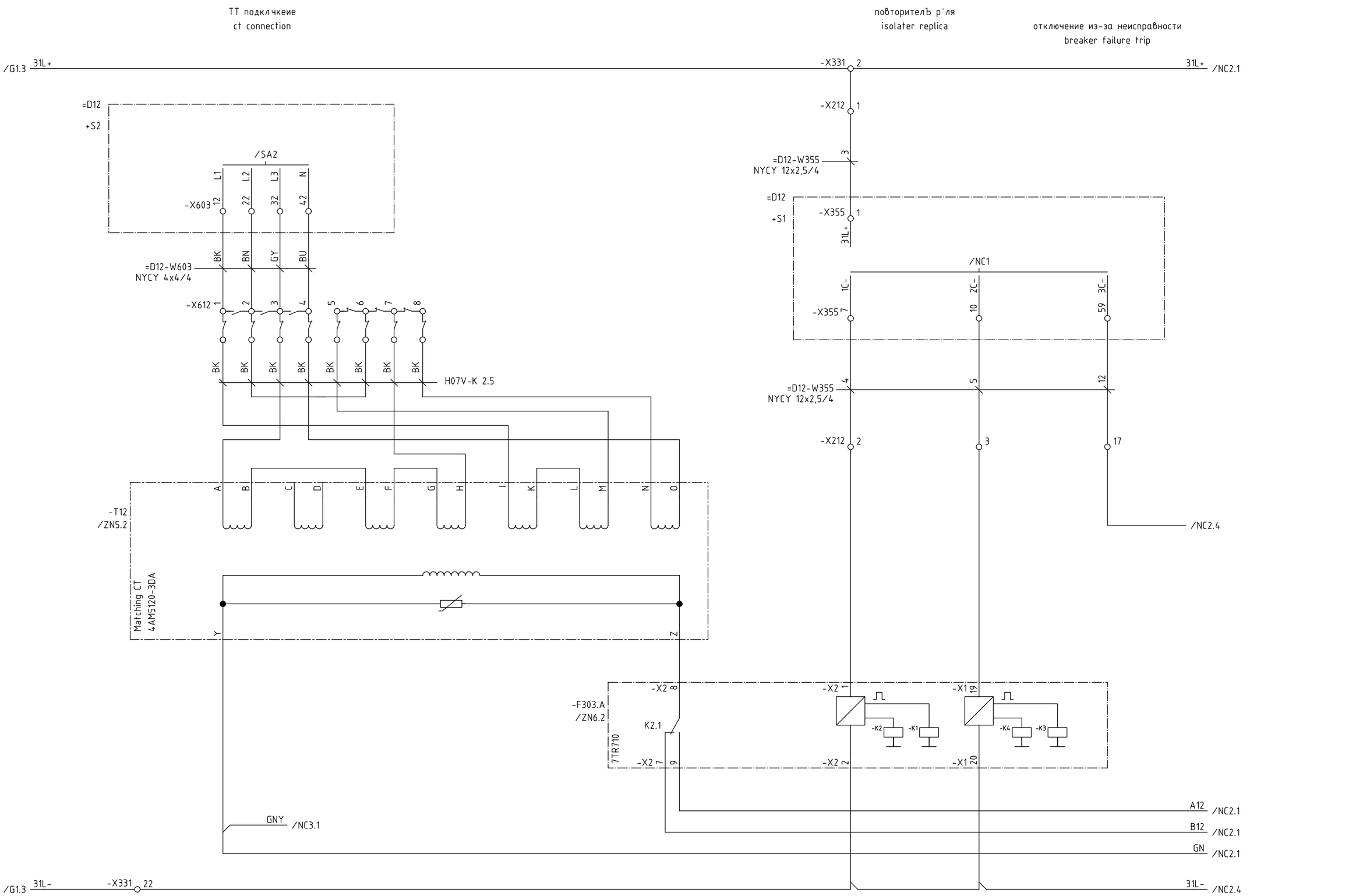

Вся проводка H07V-K 1,5 BK ,в случае отсутствия другой спецификации
wiring H07V-K 1,5 BK , if not otherwise specified

ELCAD-Version 7.1.0
Last used: 02.02.2007
Archive: = / S / NC / 1

Project: P:/Anl/GEO/Zestafoni_VO/710/050915_WR_indoor/D00_R1.pro
Symbol library 1: GeorgSym
Symbol library 2: PTD60617
Symbol library 3: H2_60617
Symbol library 4:

Translate file A: a-project.etr
Translate file B: b-Zestafoni_r.etr
Translate file C: C_FB_E.etr
Translate file D: d-Feld_e.etr

CopyRight (C) Siemens AG 2005 All Rights Reserved

				Date	31.03.05	Power Transmission Rehabilitation Program II	Siemens AG	BB protection		S	=D00
A	workshop rev.	13.09.05	Fra	Drawn	Witting	GSE Georgian State Electric System		Защита СШ			+R1
R1	AS BUILT	12.12.06	GRE	Appr.	Wolf	FICHTNER		busbar protection			NC1
Rev.	Remarks	Date	Name	Norm		Orig./Repl.f./Repl.by		Circuit diagram	(3)E50115-A2928-S324-R1		Sheet 1+ 20 Sh.

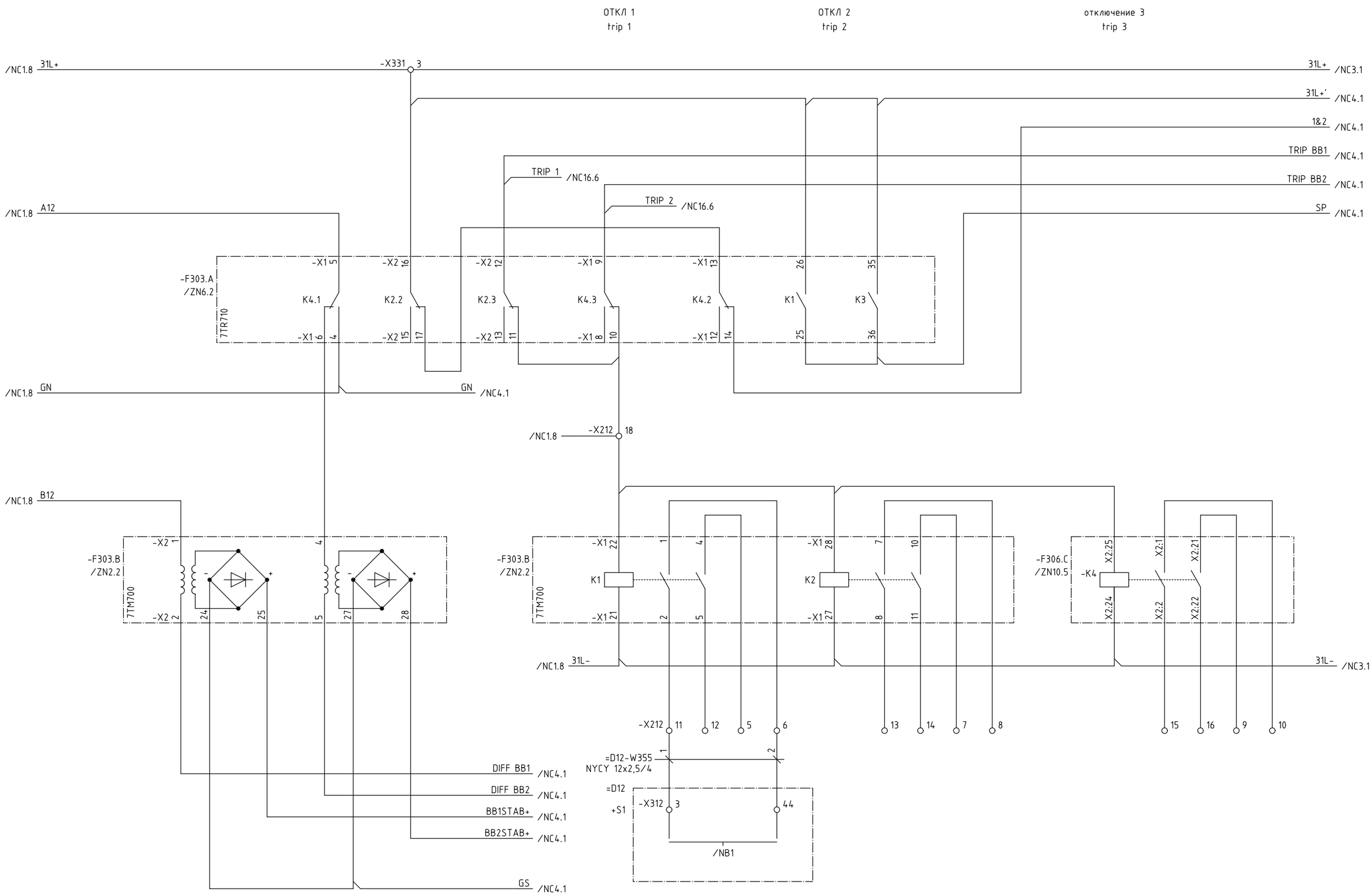

Вся проводка H07V-K 1,5 BK ,в случае отсутствия другой спецификации
wiring H07V-K 1,5 BK , if not otherwise specified

				Date	31.03.05	Power Transmission Rehabilitation Program II	Siemens AG	BB protection	S	=D00	
A	workshop rev.	13.09.05	Fra	Drawn	Witting	GSE Georgian State Electric System		Защита СШ		+R1	NC2
R1	AS BUILT	12.12.06	GRE	Appr.	Wolf	FICHTNER		busbar protection	(3)E50115-A2928-S324-R1		Sheet 2+
Rev.	Remarks	Date	Name	Norm		Orig./Repl.f./Repl.by		Circuit diagram			20 Sh.

ELCAD-Version 7.1.0
Last used: 02.02.2007
Archive: = / S / NC / 2
Project: P:/Anl/GEO/Zestafoni_VO/710/050915_WR_indoor/D00_R1.pro
Translate file A: a-project.etr
Translate file B: b-Zestafoni_r.etr
Translate file C: C_FB_E.etr
Translate file D: d-Feld_e.etr
Symbol library 1: GeorgSym
Symbol library 2: PTD60617
Symbol library 3: H2_60617
Symbol library 4:

CopyRight (C) Siemens AG 2005 All Rights Reserved

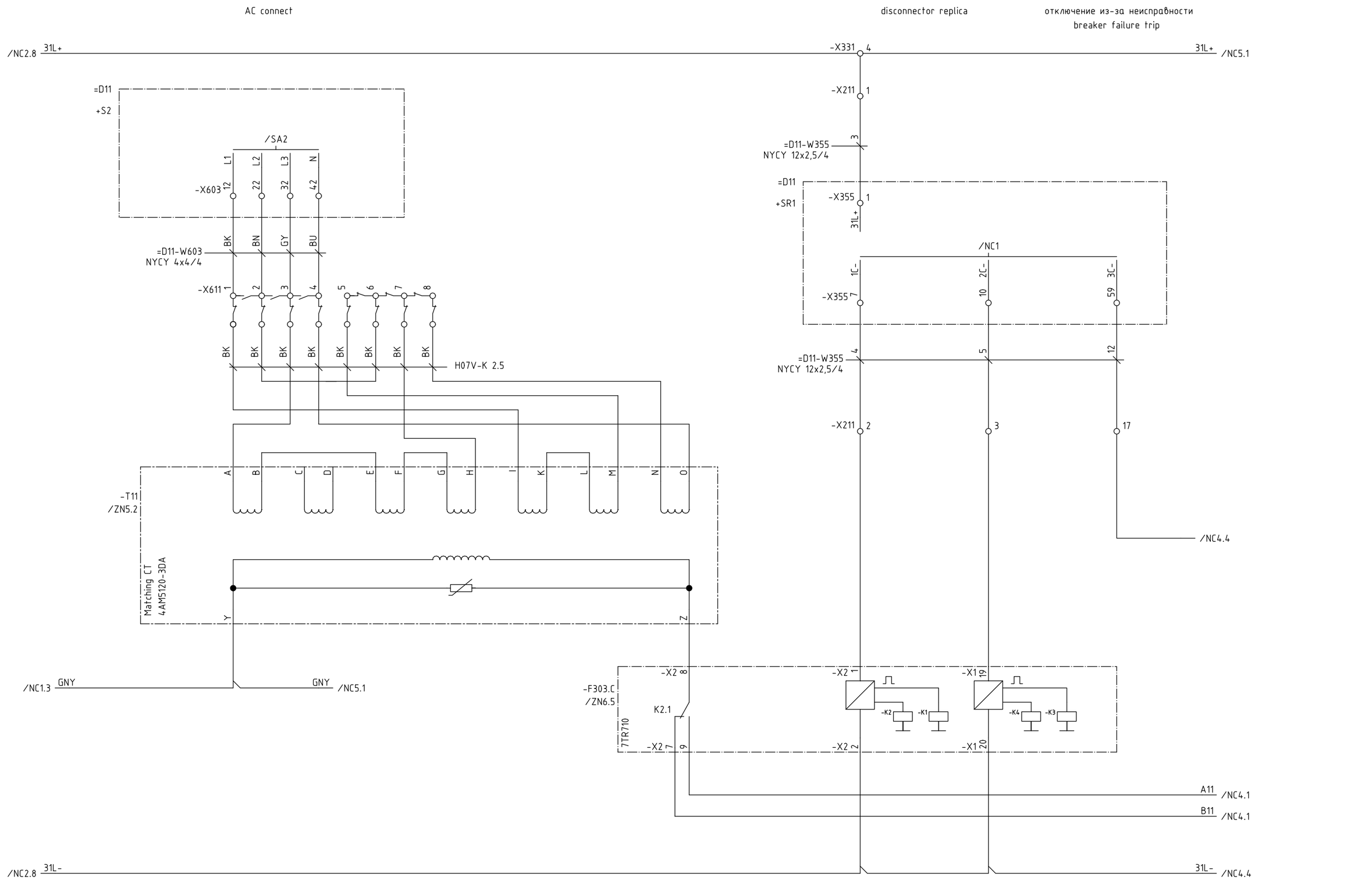

Вся проводка H07V-K 1,5 BK ,в случае отсутствия другой спецификации
wiring H07V-K 1,5 BK , if not otherwise specified

ELCAD-Version 7.1.0
Last used: 02.02.2007
Archive: = / S / NC / 3

Project: P:/Anl/GEO/Zestafoni_VO/710/050915_WR_indoor/D00_R1.pro
Symbol library 1: GeorgSym
Symbol library 2: PTD60617
Symbol library 3: H2_60617
Symbol library 4:

Translate file A: a-project.etr
Translate file B: b-Zestafoni_r.etr
Translate file C: C_FB_E.etr
Translate file D: d-Feld_e.etr

CopyRight (C) Siemens AG 2005 All Rights Reserved

				Date	31.03.05	Power Transmission Rehabilitation Program II	Siemens AG	BB protection		S	=D00
A	workshop rev.	13.09.05	Fra	Drawn	Witting	GSE Georgian State Electric System		Защита СШ			+R1
R1	AS BUILT	12.12.06	GRE	Appr.	Wolf	FICHTNER		busbar protection	(3)E50115-A2928-S324-R1		
Rev.	Remarks	Date	Name	Norm		Orig./Repl.f./Repl.by		Circuit diagram			

NC3
Sheet 3+
20 Sh.

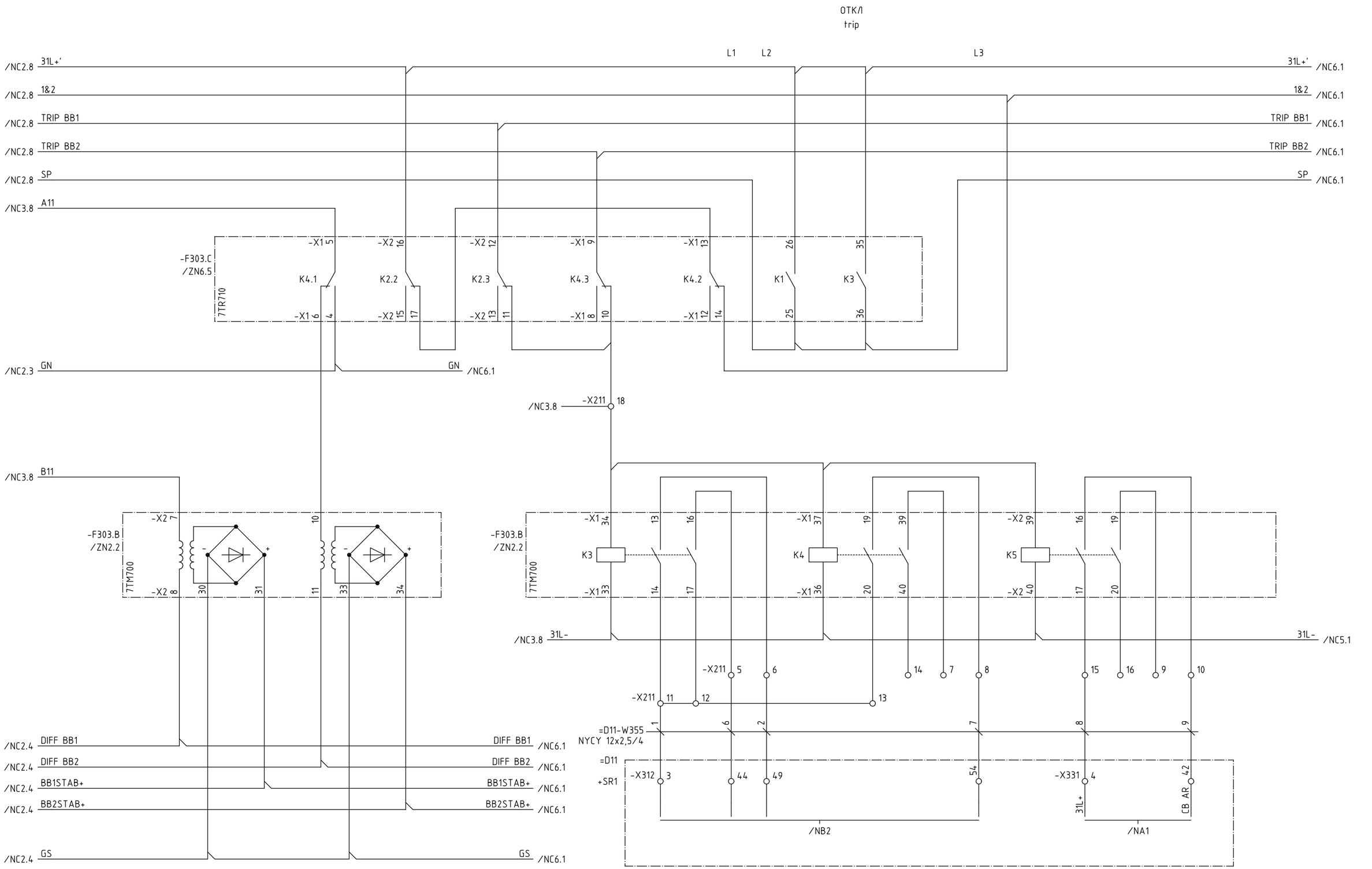

Вся проводка H07V-K 1,5 BK ,в случае отсутствия другой спецификации
wiring H07V-K 1,5 BK , if not otherwise specified

				Date	31.03.05	Power Transmission Rehabilitation Program II	Siemens AG	BB protection		S	=D00
A	workshop rev.	13.09.05	Fra	Drawn	Witting	GSE Georgian State Electric System		Защита СШ			+R1 NC4
R1	AS BUILT	12.12.06	GRE	Appr.	Wolf	FICHTNER		busbar protection	(3)E50115-A2928-S324-R1		Sheet 4+
Rev.	Remarks	Date	Name	Norm		Orig./Repl.f./Repl.by		Circuit diagram			20 Sh.

ELCAD-Version 7.1.0
Last used: 02.02.2007
Archive: = / S / NC / 4
Project: P:/Anl/GEO/Zestafoni_VO/710/050915_WR_indoor/D00_R1.pro
Symbol library 1: GeorgSym
Symbol library 2: PTD60617
Symbol library 3: H2_60617
Symbol library 4:
Translate file A: a-project.etr
Translate file B: b-Zestafoni_r.etr
Translate file C: C_FB_E.etr
Translate file D: d-Feld_e.etr

CopyRight (C) Siemens AG 2005 All Rights Reserved

ELCAD-Version 7.1.0
Last used: 02.02.2007
Archive: = / S / NC / 5
Project: P:/Anl/GEO/Zestafoni_VO/710/050915_WR_indoor/D00_R1.pro
Symbol library 1: GeorgSym Translate file A: a-project.etr
Symbol library 2: PTD60617 Translate file B: b-Zestafoni_r.etr
Symbol library 3: H2_60617 Translate file C: C_FB_E.etr
Symbol library 4: Translate file D: d-Feld_e.etr
CopyRight (C) Siemens AG 2005 All Rights Reserved

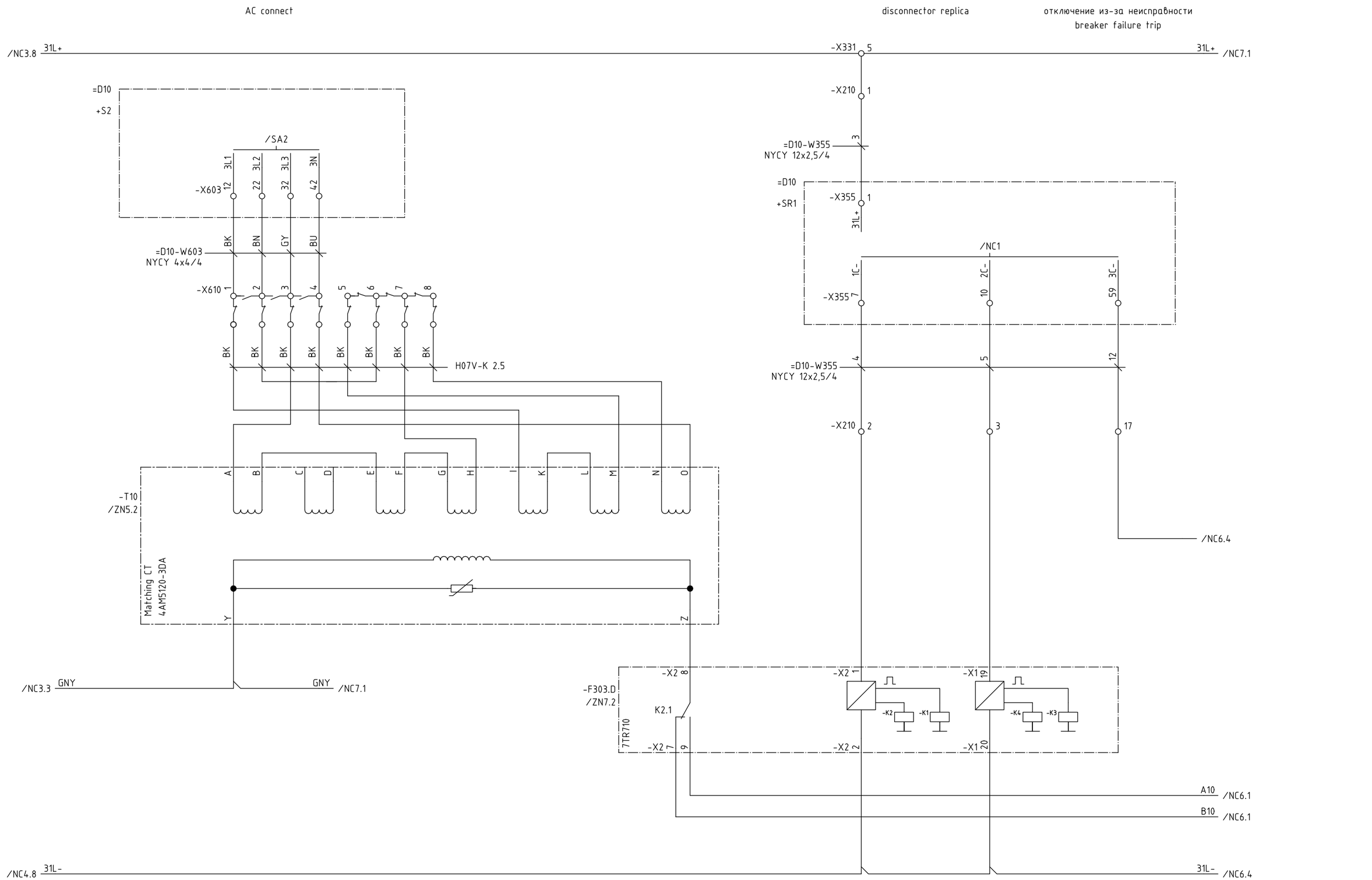

Вся проводка H07V-K 1,5 BK ,в случае отсутствия другой спецификации
wiring H07V-K 1,5 BK , if not otherwise specified

				Date	31.03.05	Power Transmission Rehabilitation Program II	Siemens AG	BB protection		S	=D00
A	workshop rev.	13.09.05	Fra	Drawn	Witting	GSE Georgian State Electric System		Защита СШ			+R1
R1	AS BUILT	12.12.06	GRE	Appr.	Wolf	FICHTNER		busbar protection	(3)E50115-A2928-S324-R1		
Rev.	Remarks	Date	Name	Norm		Orig./Repl.f./Repl.by		Circuit diagram			

NC5
Sheet 5+
20 Sh.

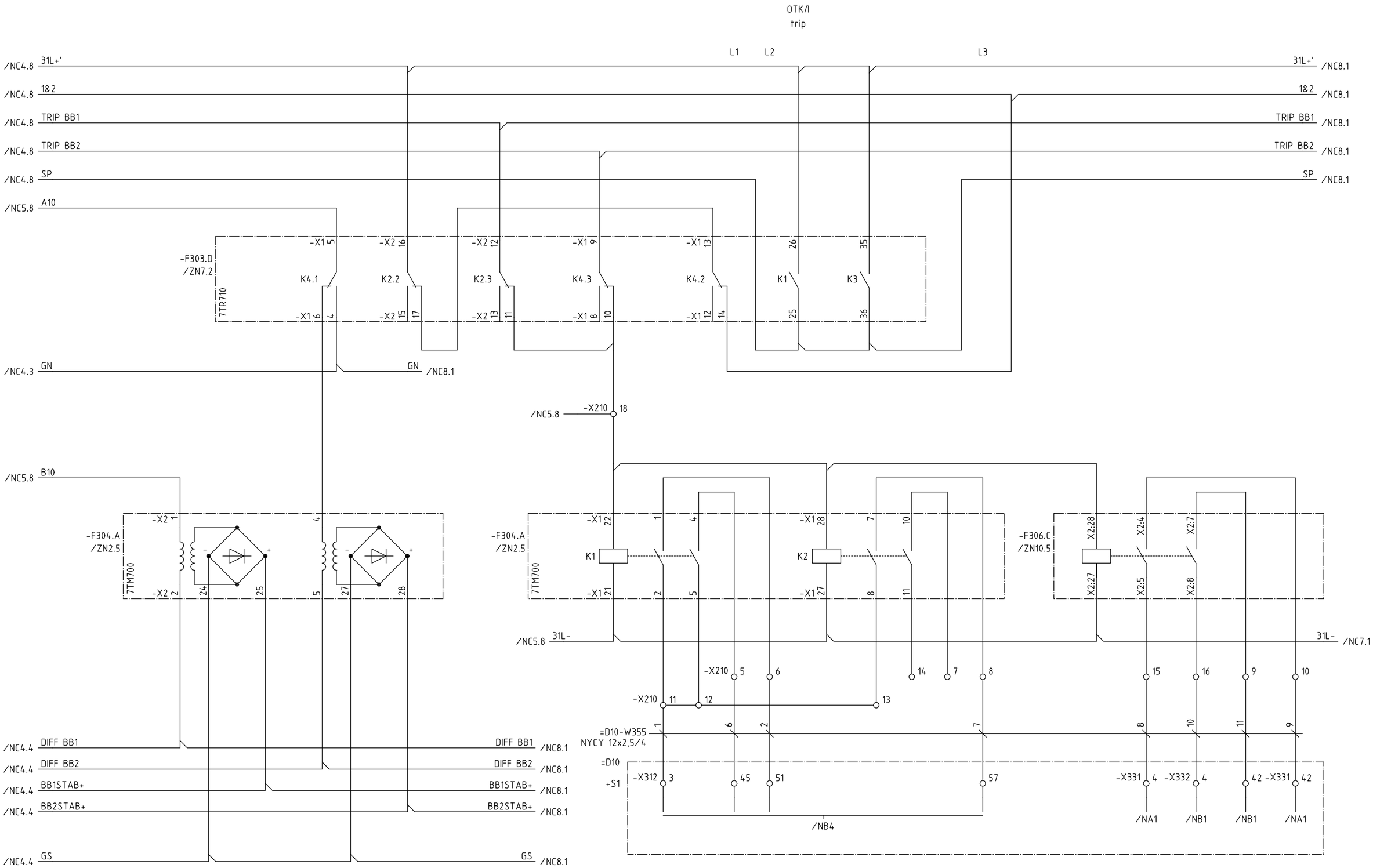

Вся проводка H07V-K 1,5 BK ,в случае отсутствия другой спецификации
wiring H07V-K 1,5 BK , if not otherwise specified

				Date	31.03.05	Power Transmission Rehabilitation Program II	Siemens AG	BB protection		S	=D00	
A	workshop rev.	13.09.05	Fra	Drawn	Witting	GSE Georgian State Electric System		Защита СШ			+R1	NC6
R1	AS BUILT	12.12.06	GRE	Appr.	Wolf	FICHTNER		busbar protection	(3)E50115-A2928-S324-R1			Sheet 6+
Rev.	Remarks	Date	Name	Norm		Orig./Repl.f./Repl.by		Circuit diagram				20 Sh.

ELCAD-Version 7.1.0
Last used: 02.02.2007
Archive: = / S / NC / 6
Project: P:/Anl/GEO/Zestafoni_VO/710/050915_WR_indoor/D00_R1.pro
Symbol library 1: GeorgSym
Symbol library 2: PTD60617
Symbol library 3: H2_60617
Symbol library 4:
Translate file A: a-project.efr
Translate file B: b-Zestafoni_r.efr
Translate file C: C_FB_E.efr
Translate file D: d-Feld_e.efr

CopyRight (C) Siemens AG 2005 All Rights Reserved

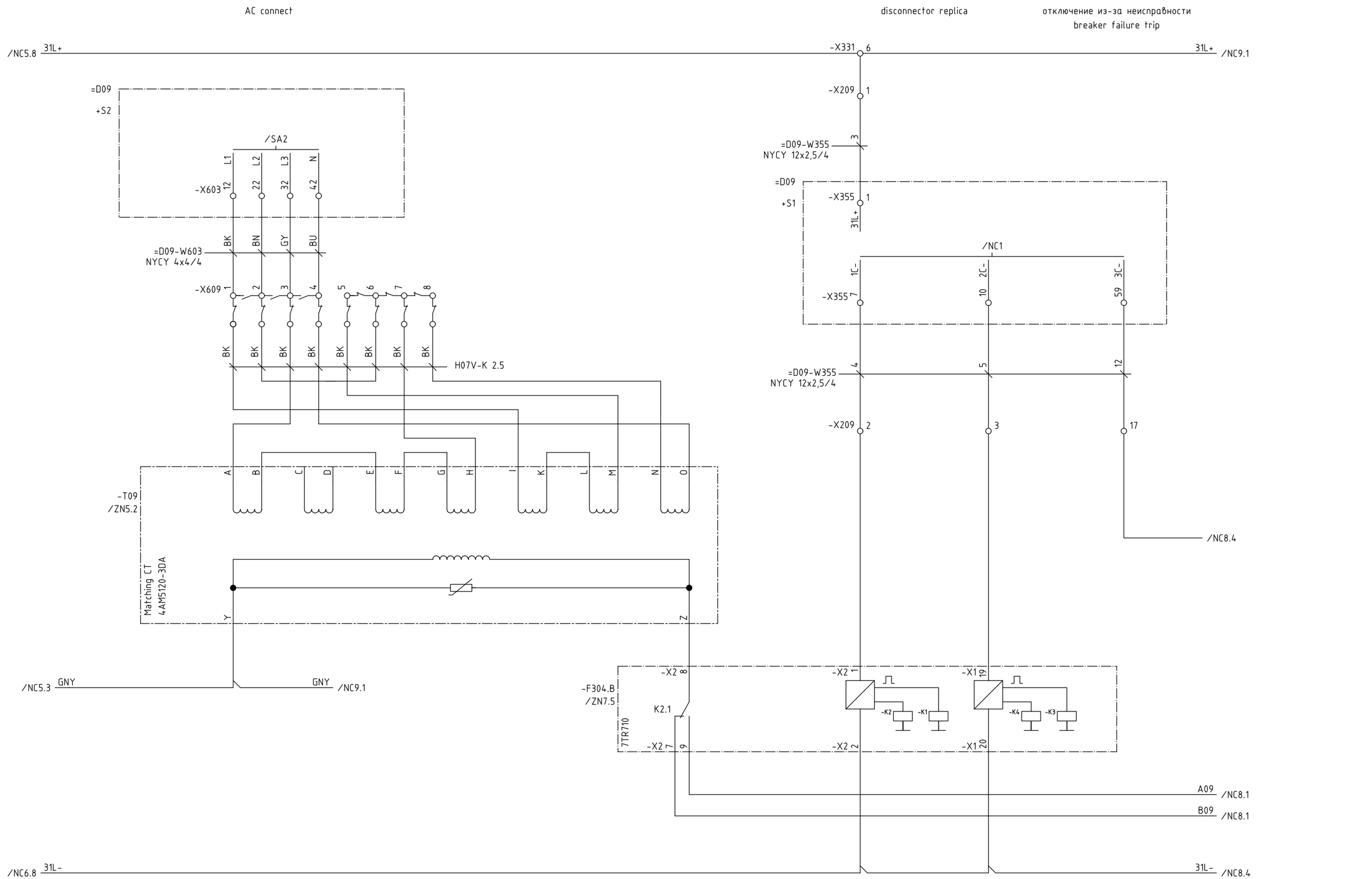

Вся проводка H07V-K 1,5 BK ,в случае отсутствия другой спецификации
wiring H07V-K 1,5 BK , if not otherwise specified

				Date	31.03.05	Power Transmission Rehabilitation Program II	Siemens AG	BB protection		S	=D00
A	workshop rev.	13.09.05	Fra	Drawn	Witting	GSE Georgian State Electric System		Защита СШ			+R1
R1	AS BUILT	12.12.06	GRE	Appr.	Wolf	FICHTNER		busbar protection	(3)E50115-A2928-S324-R1		
Rev.	Remarks	Date	Name	Norm		Orig./Repl.f./Repl.by		Circuit diagram			

NC7
Sheet 7+
20 Sh.

ELCAD-Version 7.1.0
Last used: 02.02.2007
Archive: = / S / NC / 7
Project: P:/Anl/GEO/Zestafoni_VO/710/050915_WR_indoor/D00_R1.pro
Symbol library 1: GeorgSym
Symbol library 2: PTD60617
Symbol library 3: H2_60617
Symbol library 4:
Translate file A: a-project.etr
Translate file B: b-Zestafoni_r.etr
Translate file C: C_FB_E.etr
Translate file D: d-Feld_e.etr

CopyRight (C) Siemens AG 2005 All Rights Reserved

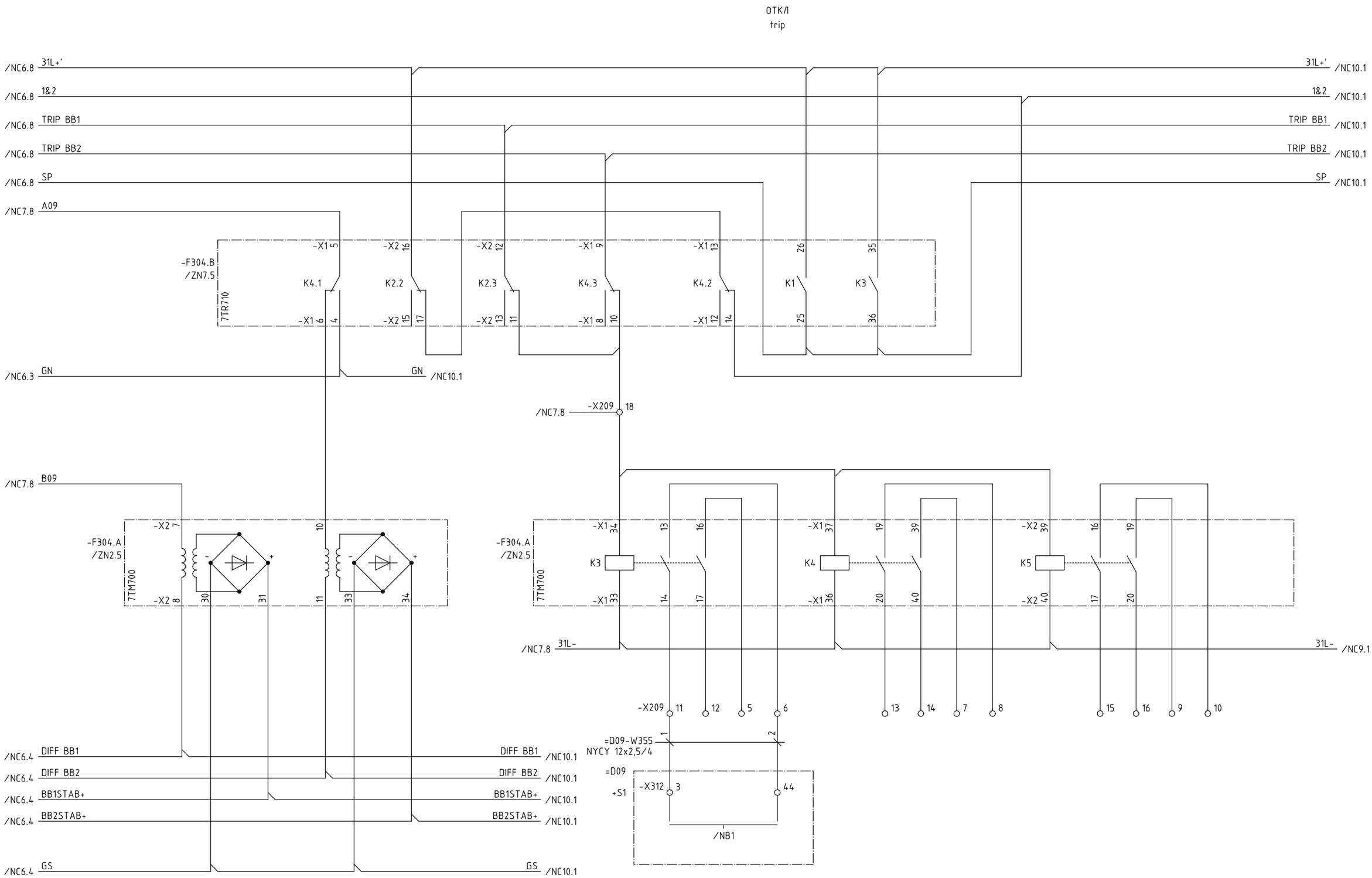

Вся проводка H07V-K 1,5 BK ,в случае отсутствия другой спецификации
wiring H07V-K 1,5 BK , if not otherwise specified

				Date	31.03.05	Power Transmission Rehabilitation Program II	Siemens AG	BB protection		S	=D00
A	workshop rev.	13.09.05	Fra	Drawn	Witting	GSE Georgian State Electric System		Защита СШ			+R1 NC8
R1	AS BUILT	12.12.06	GRE	Appr.	Wolf	FICHTNER		busbar protection	(3)E50115-A2928-S324-R1		Sheet 8+
Rev.	Remarks	Date	Name	Norm		Orig./Repl.f./Repl.by		Circuit diagram			20 Sh.

ELCAD-Version 7.1.0
Last used: 02.02.2007
Archive: = / S / NC / 8
Project: P:/Anl/GEO/Zestafoni_VO/710/050915_WR_indoor/D00_R1.pro
Translate file A: a-project.etr
Translate file B: b-Zestafoni_r.etr
Translate file C: C_FB_E.etr
Translate file D: d-Feld_e.etr
Symbol library 1: GeorgSym
Symbol library 2: PTD60617
Symbol library 3: H2_60617
Symbol library 4:

CopyRight (C) Siemens AG 2005 All Rights Reserved

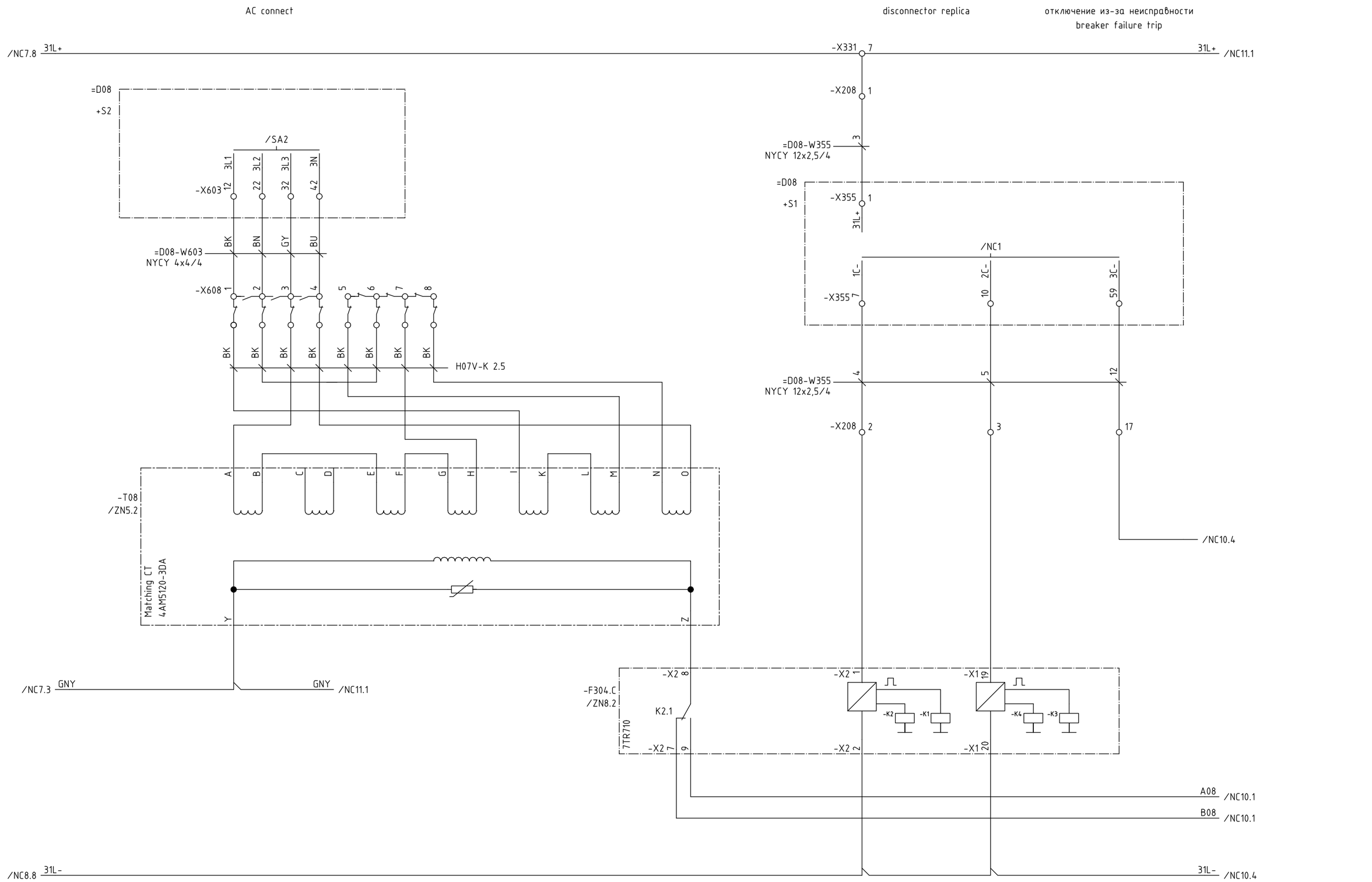

Вся проводка H07V-K 1,5 BK ,в случае отсутствия другой спецификации
wiring H07V-K 1,5 BK , if not otherwise specified

				Date	31.03.05	Power Transmission Rehabilitation Program II	Siemens AG	BB protection		S	=D00
A	workshop rev.	13.09.05	Fra	Drawn	Witting	GSE Georgian State Electric System		Защита СШ			+R1
R1	AS BUILT	12.12.06	GRE	Appr.	Wolf	FICHTNER		busbar protection	(3)E50115-A2928-S324-R1		NC9
Rev.	Remarks	Date	Name	Norm		Orig./Repl.f./Repl.by		Circuit diagram			Sheet 9+
											20 Sh.

ELCAD-Version 7.1.0
Last used: 02.02.2007
Archive: = / S / NC / 9

Project: P:/Anl/GEO/Zestafoni_VO/710/050915_WR_indoor/D00_R1.pro
Symbol library 1: GeorgSym Translate file A: a-project.etr
Symbol library 2: PTD60617 Translate file B: b-Zestafoni_r.etr
Symbol library 3: H2_60617 Translate file C: C_FB_E.etr
Symbol library 4: Translate file D: d-Feld_e.etr

CopyRight (C) Siemens AG 2005 All Rights Reserved

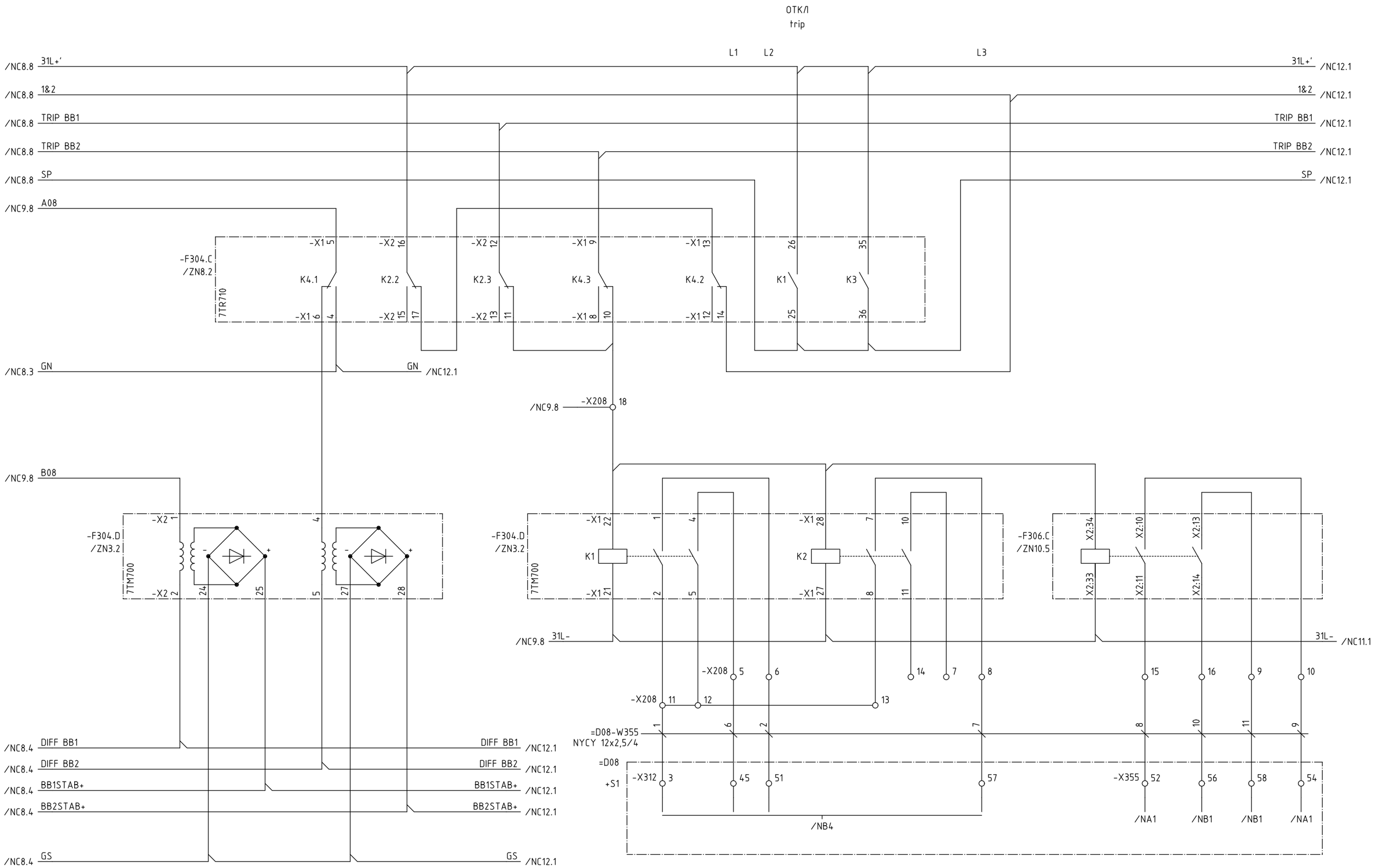

Вся проводка H07V-K 1,5 BK ,в случае отсутствия другой спецификации
wiring H07V-K 1,5 BK , if not otherwise specified

				Date	31.03.05	Power Transmission Rehabilitation Program II	Siemens AG	BB protection		S	=D00
A	workshop rev.	13.09.05	Fra	Drawn	Witting	GSE Georgian State Electric System		Защита СШ			+R1 NC10
R1	AS BUILT	12.12.06	GRE	Appr.	Wolf	FICHTNER		busbar protection	(3)E50115-A2928-S324-R1		Sheet 10+
Rev.	Remarks	Date	Name	Norm		Orig./Repl.f./Repl.by		Circuit diagram			20 Sh.

ELCAD-Version 7.1.0
Last used: 02.02.2007
Archive: = / S / NC / 10
Project: P:/Anl/GEO/Zestafoni_VO/710/050915_WR_indoor/D00_R1.pro
Symbol library 1: GeorgSym
Symbol library 2: PTD60617
Symbol library 3: H2_60617
Symbol library 4:
Translate file A: a-project.efr
Translate file B: b-Zestafoni_r.efr
Translate file C: C_FB_E.efr
Translate file D: d-Feld_e.efr

CopyRight (C) Siemens AG 2005 All Rights Reserved

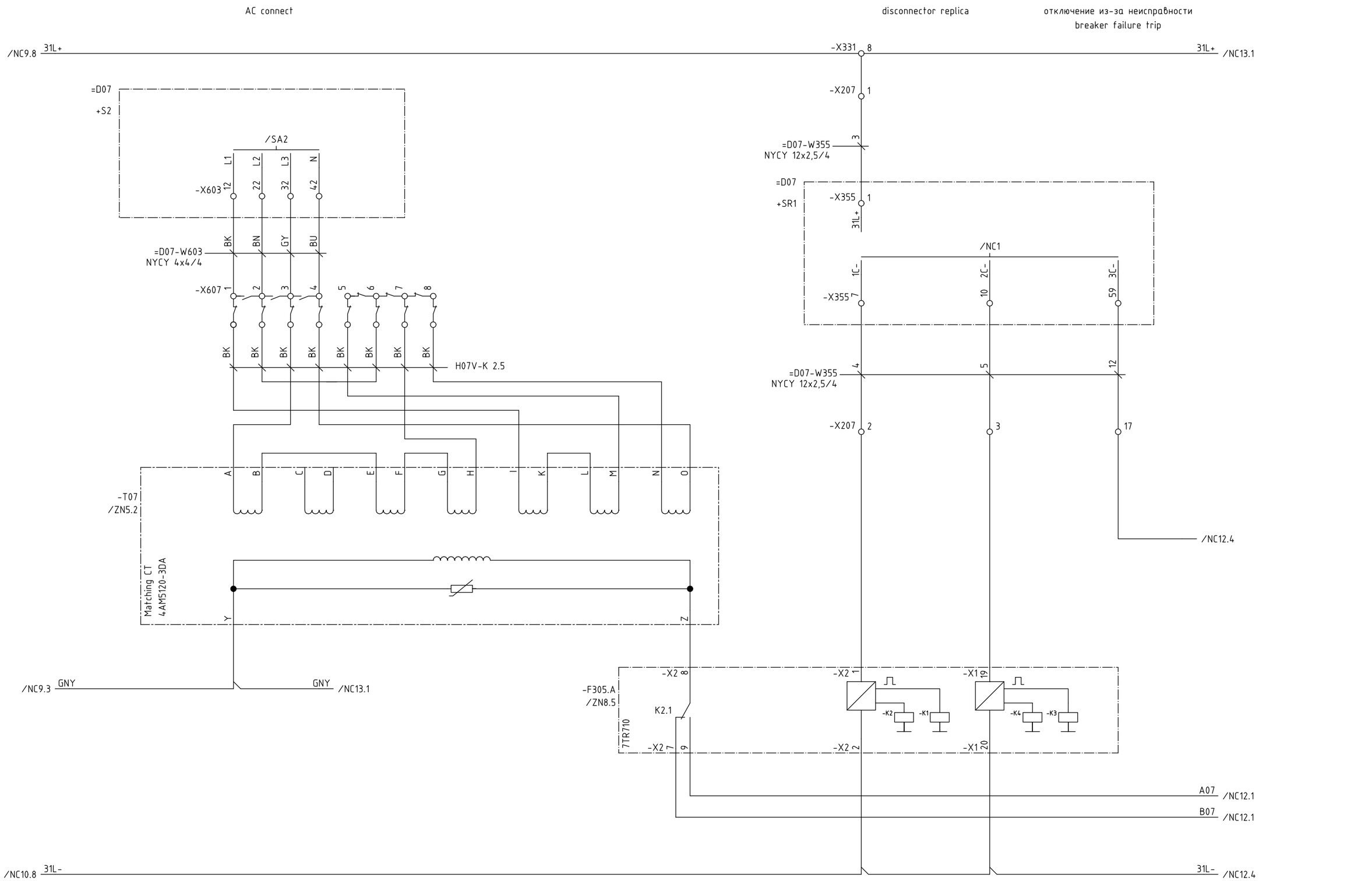

Вся проводка H07V-K 1,5 BK ,в случае отсутствия другой спецификации
wiring H07V-K 1,5 BK , if not otherwise specified

				Date	31.03.05	Power Transmission Rehabilitation Program II	Siemens AG	BB protection		S	=D00
A	workshop rev.	13.09.05	Fra	Drawn	Witting	GSE Georgian State Electric System		Защита СШ			+R1
R1	AS BUILT	12.12.06	GRE	Appr.	Wolf	FICHTNER		busbar protection	(3)E50115-A2928-S324-R1		
Rev.	Remarks	Date	Name	Norm		Orig./Repl.f./Repl.by		Circuit diagram			

NC11
Sheet 11+
20 Sh.

ELCAD-Version 7.1.0
Last used: 02.02.2007
Archive: = / S / NC / 11
Project: P:/Anl/GEO/Zestafoni_VO/710/050915_WR_indoor/D00_R1.pro
Translate file A: a-project.etr
Translate file B: b-Zestafoni_r.etr
Translate file C: C_FB_E.etr
Translate file D: d-Feld_e.etr
Symbol library 1: GeorgSym
Symbol library 2: PTD60617
Symbol library 3: H2_60617
Symbol library 4:

CopyRight (C) Siemens AG 2005 All Rights Reserved

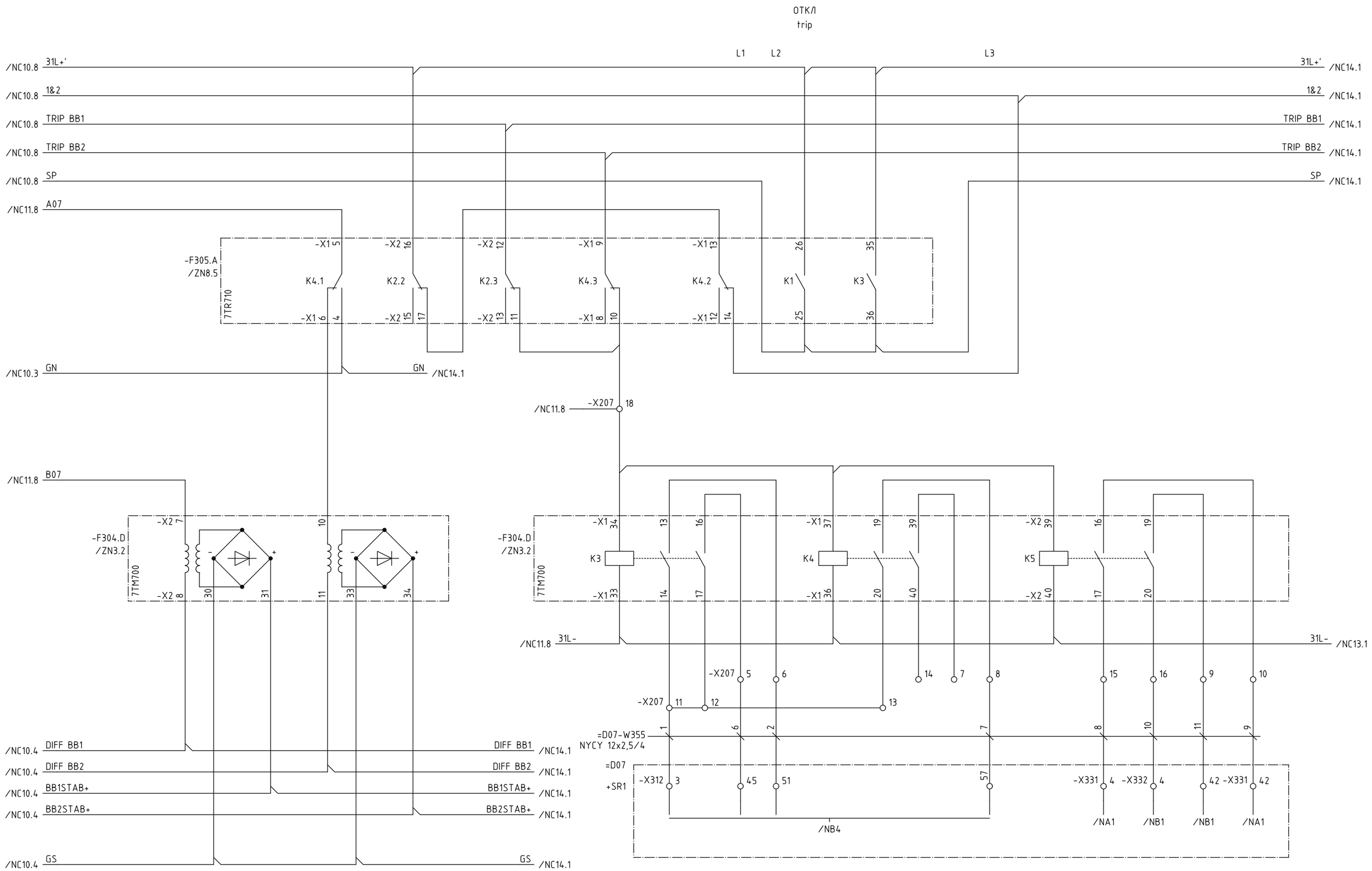

Вся проводка H07V-K 1,5 BK ,в случае отсутствия другой спецификации
wiring H07V-K 1,5 BK , if not otherwise specified

				Date	31.03.05	Power Transmission Rehabilitation Program II	Siemens AG	BB protection		S	=D00
A	workshop rev.	13.09.05	Fra	Drawn	Witting	GSE Georgian State Electric System		Защита СШ			+R1 NC12
R1	AS BUILT	12.12.06	GRE	Appr.	Wolf	FICHTNER		busbar protection	(3)E50115-A2928-S324-R1		Sheet 12+
Rev.	Remarks	Date	Name	Norm		Orig./Repl.f./Repl.by		Circuit diagram			20 Sh.

ELCAD-Version 7.1.0
Last used: 02.02.2007
Archive: = / S / NC / 12

Project: P:/Anl/GEO/Zestafoni_VO/710/050915_WR_indoor/D00_R1.pro
Symbol library 1: GeorgSym
Symbol library 2: PTD60617
Symbol library 3: H2_60617
Symbol library 4:

Translate file A: a-project.etr
Translate file B: b-Zestafoni_r.etr
Translate file C: C_FB_E.etr
Translate file D: d-Feld_e.etr

CopyRight (C) Siemens AG 2005 All Rights Reserved

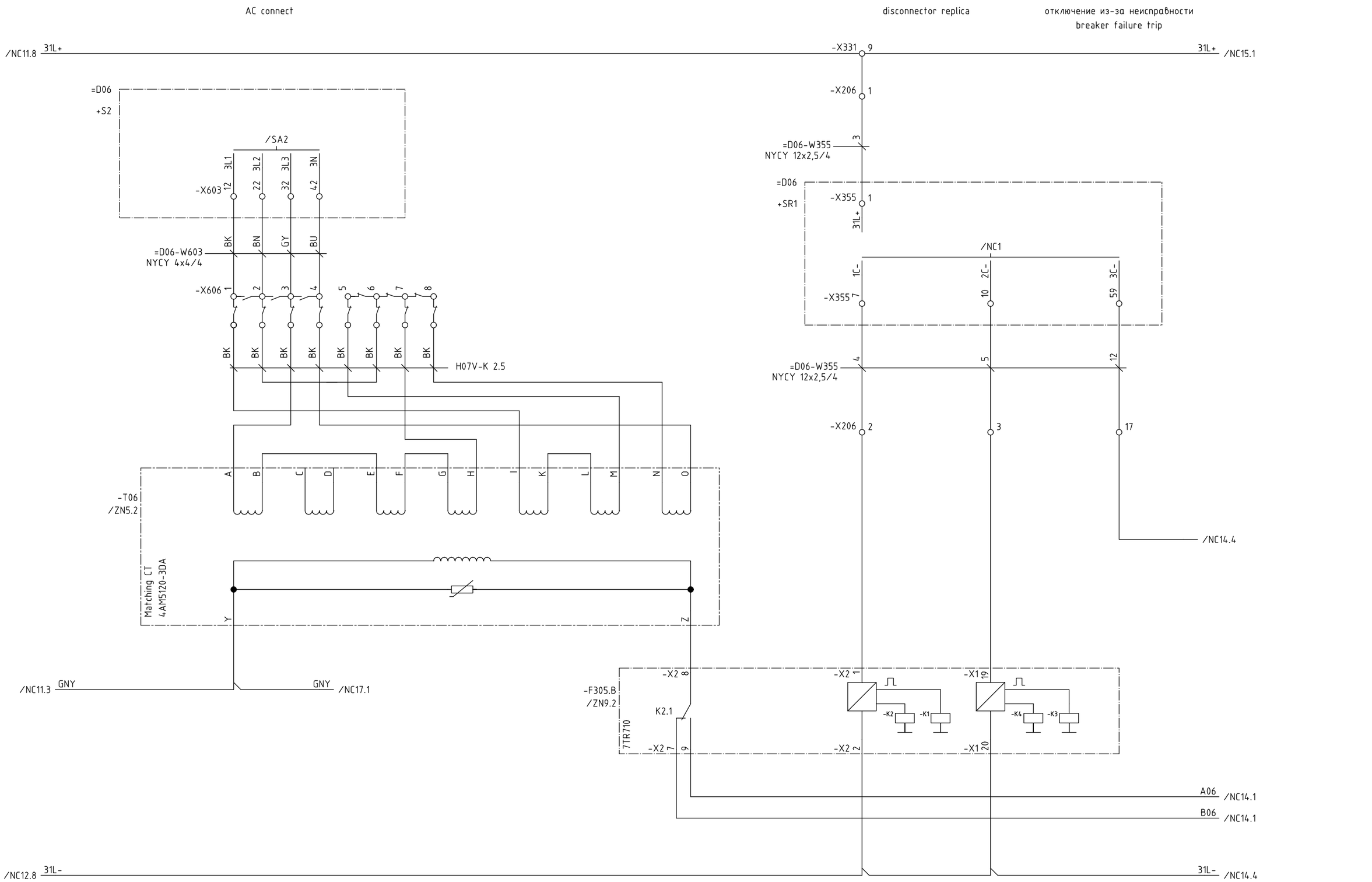

Вся проводка H07V-K 1,5 BK ,в случае отсутствия другой спецификации
wiring H07V-K 1,5 BK , if not otherwise specified

CopyRight (C) Siemens AG 2005 All Rights Reserved

ELCAD-Version 7.1.0
Last used: 02.02.2007
Archive: = / S / NC / 13
Project: P:/Anl/GEO/Zestafoni_VO/710/050915_WR_indoor/D00_R1.pro
Symbol library 1: GeorgSym
Symbol library 2: PTD60617
Symbol library 3: H2_60617
Symbol library 4:
Translate file A: a-project.etr
Translate file B: b-Zestafoni_r.etr
Translate file C: C_FB_E.etr
Translate file D: d-Feld_e.etr

				Date	31.03.05	Power Transmission Rehabilitation Program II	Siemens AG	BB protection		S	=D00
A	workshop rev.	13.09.05	Fra	Drawn	Witting	GSE Georgian State Electric System		Защита СШ			+R1 NC13
R1	AS BUILT	12.12.06	GRE	Appr.	Wolf	FICHTNER		busbar protection	(3)E50115-A2928-S324-R1		Sheet 13+
Rev.	Remarks	Date	Name	Norm		Orig./Repl.f./Repl.by		Circuit diagram			20 Sh.

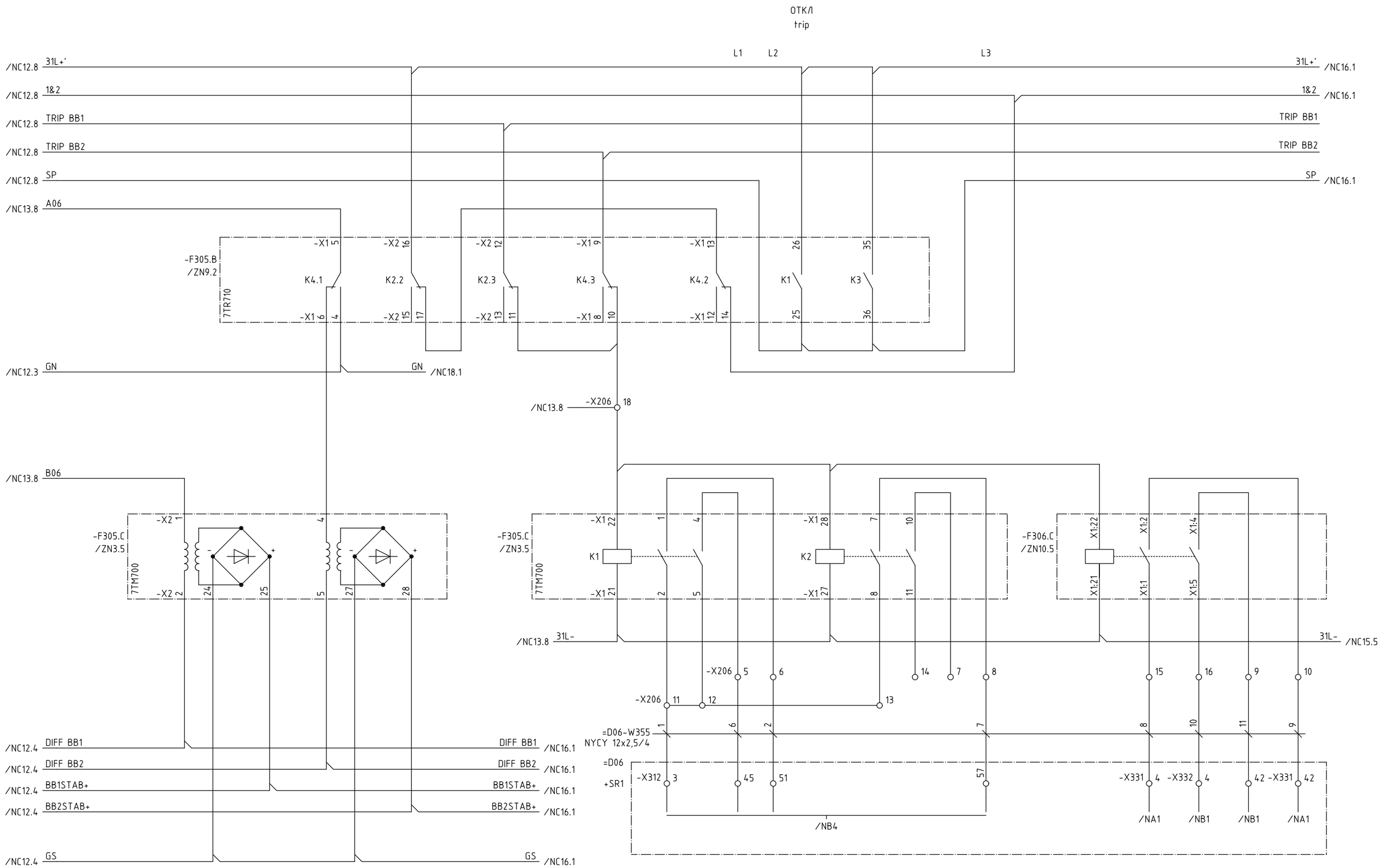

Вся проводка H07V-K 1,5 BK ,в случае отсутствия другой спецификации
wiring H07V-K 1,5 BK , if not otherwise specified

ELCAD-Version 7.1.0
Last used: 02.02.2007
Archive: = / S / NC / 14

Project: P:/Anl/GEO/Zestafoni_VO/710/050915_WR_indoor/D00_R1.pro
Symbol library 1: GeorgSym
Symbol library 2: PTD60617
Symbol library 3: H2_60617
Symbol library 4:

Translate file A: a-project.efr
Translate file B: b-Zestafoni_r.efr
Translate file C: C_FB_E.efr
Translate file D: d-Feld_e.efr

CopyRight (C) Siemens AG 2005 All Rights Reserved

				Date	31.03.05	Power Transmission Rehabilitation Program II	Siemens AG	BB protection		S	=D00
A	workshop rev.	13.09.05	Fra	Drawn	Witting	GSE Georgian State Electric System		Защита СШ			+R1
R1	AS BUILT	12.12.06	GRE	Appr.	Wolf	FICHTNER		busbar protection	(3)E50115-A2928-S324-R1		NC14
Rev.	Remarks	Date	Name	Norm		Orig./Repl.f./Repl.by		Circuit diagram			Sheet 14+ 20 Sh.

ELCAD-Version 7.1.0
Last used: 02.02.2007
Archive: = / S / NC / 15
Project: P:/Anl/GEO/Zestafoni_V0/710/050915_WR_indoor/D00_R1.pro
Symbol library 1: GeorgSym
Symbol library 2: PTD60617
Symbol library 3: H2_60617
Symbol library 4:
Translate file A: a-project.etr
Translate file B: b-Zestafoni_r.etr
Translate file C: C_FB_E.etr
Translate file D: d-Feld_e.etr
CopyRight (C) Siemens AG 2005 All Rights Reserved

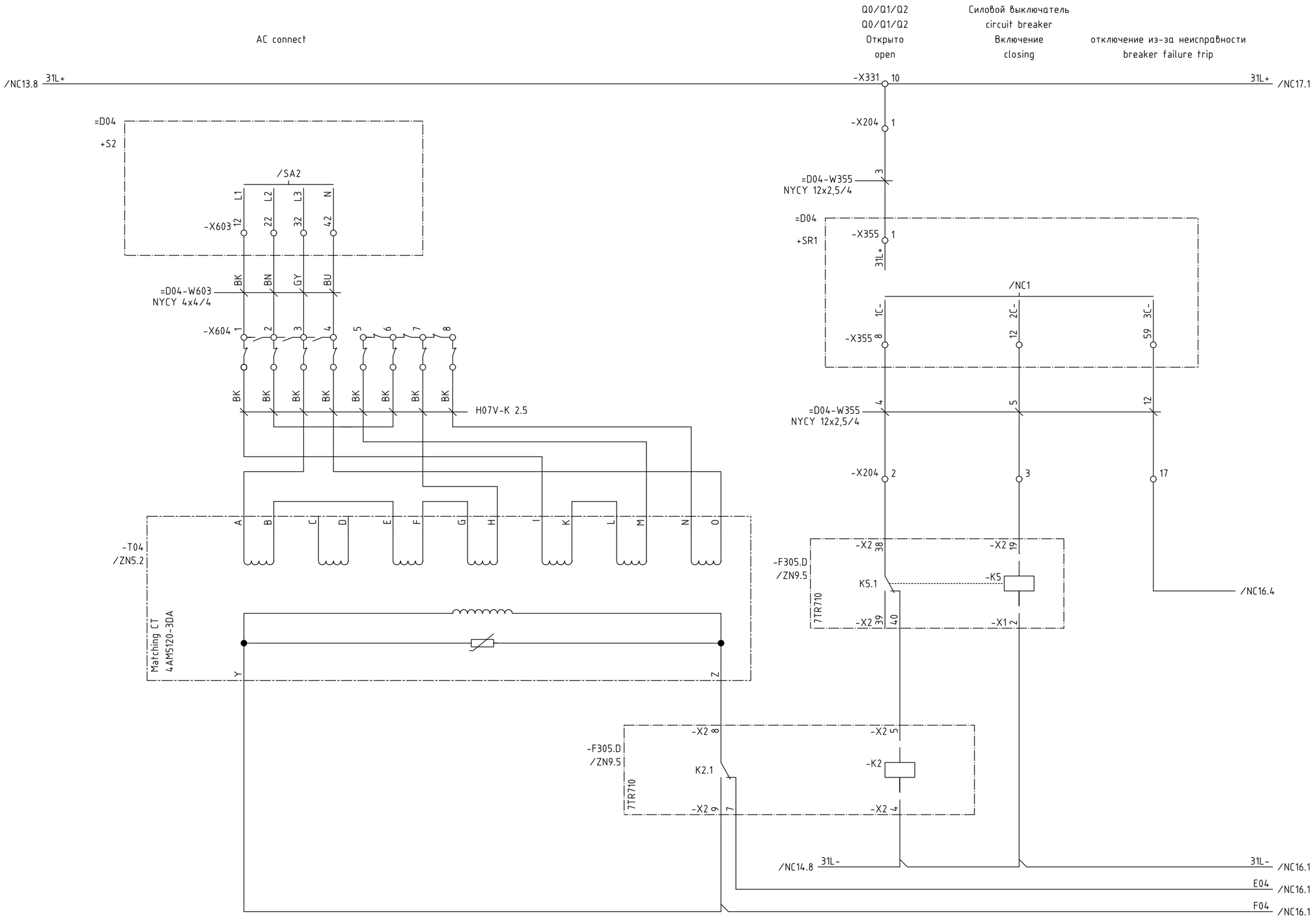

Вся проводка H07V-K 1,5 BK ,в случае отсутствия другой спецификации
wiring H07V-K 1,5 BK , if not otherwise specified

				Date	31.03.05	Power Transmission Rehabilitation Program II	Siemens AG	BB protection		S	=D00
A	workshop rev.	13.09.05	Fra	Drawn	Witting	GSE Georgian State Electric System		Защита СШ			+R1 NC15
R1	AS BUILT	12.12.06	GRE	Appr.	Wolf	FICHTNER		busbar protection	(3)E50115-A2928-S324-R1		Sheet 15+
Rev.	Remarks	Date	Name	Norm		Orig./Repl.f./Repl.by		Circuit diagram			20 Sh.

ELCAD-Version 7.1.0
Last used: 02.02.2007
Archive: = / S / NC / 16
Project: P:/Anl/GEO/Zestafoni_VO/710/050915_WR_indoor/D00_R1.pro
Symbol library 1: GeorgSym
Symbol library 2: PTD60617
Symbol library 3: H2_60617
Symbol library 4:
Translate file A: a-project.etr
Translate file B: b-Zestafoni_r.etr
Translate file C: C_FB_E.etr
Translate file D: d-Feld_e.etr
CopyRight (C) Siemens AG 2005 All Rights Reserved

ОТКЛ
trip

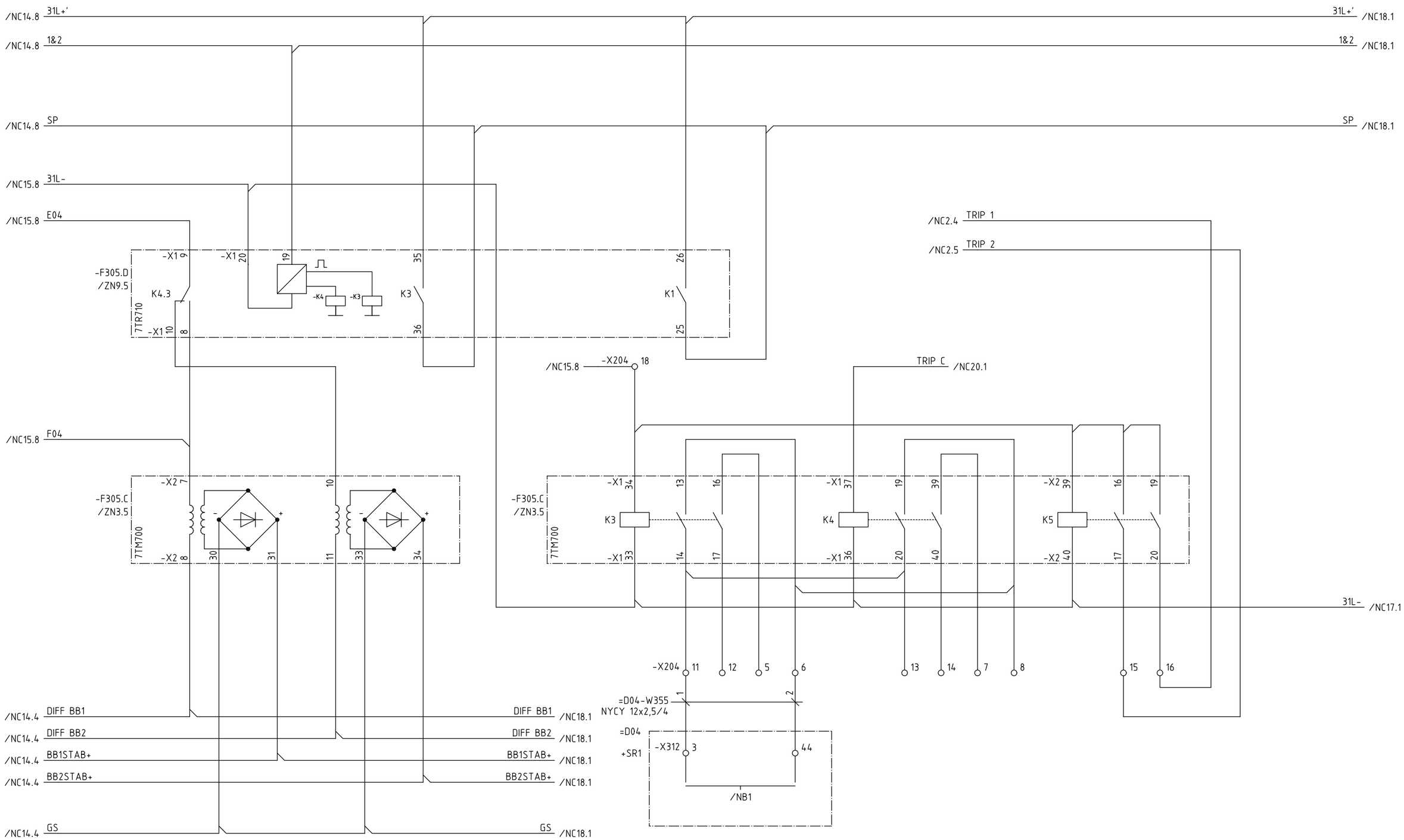

Вся проводка H07V-K 1,5 BK ,в случае отсутствия другой спецификации
wiring H07V-K 1,5 BK , if not otherwise specified

				Date	31.03.05	Power Transmission Rehabilitation Program II	Siemens AG	BB protection		S	=D00
A	workshop rev.	13.09.05	Fra	Drawn	Witting	GSE Georgian State Electric System		Защита СШ			+R1 NC16
R1	AS BUILT	12.12.06	GRE	Appr.	Wolf	FICHTNER		busbar protection	(3)E50115-A2928-S324-R1		Sheet 16+
Rev.	Remarks	Date	Name	Norm		Orig./Repl.f./Repl.by		Circuit diagram			20 Sh.

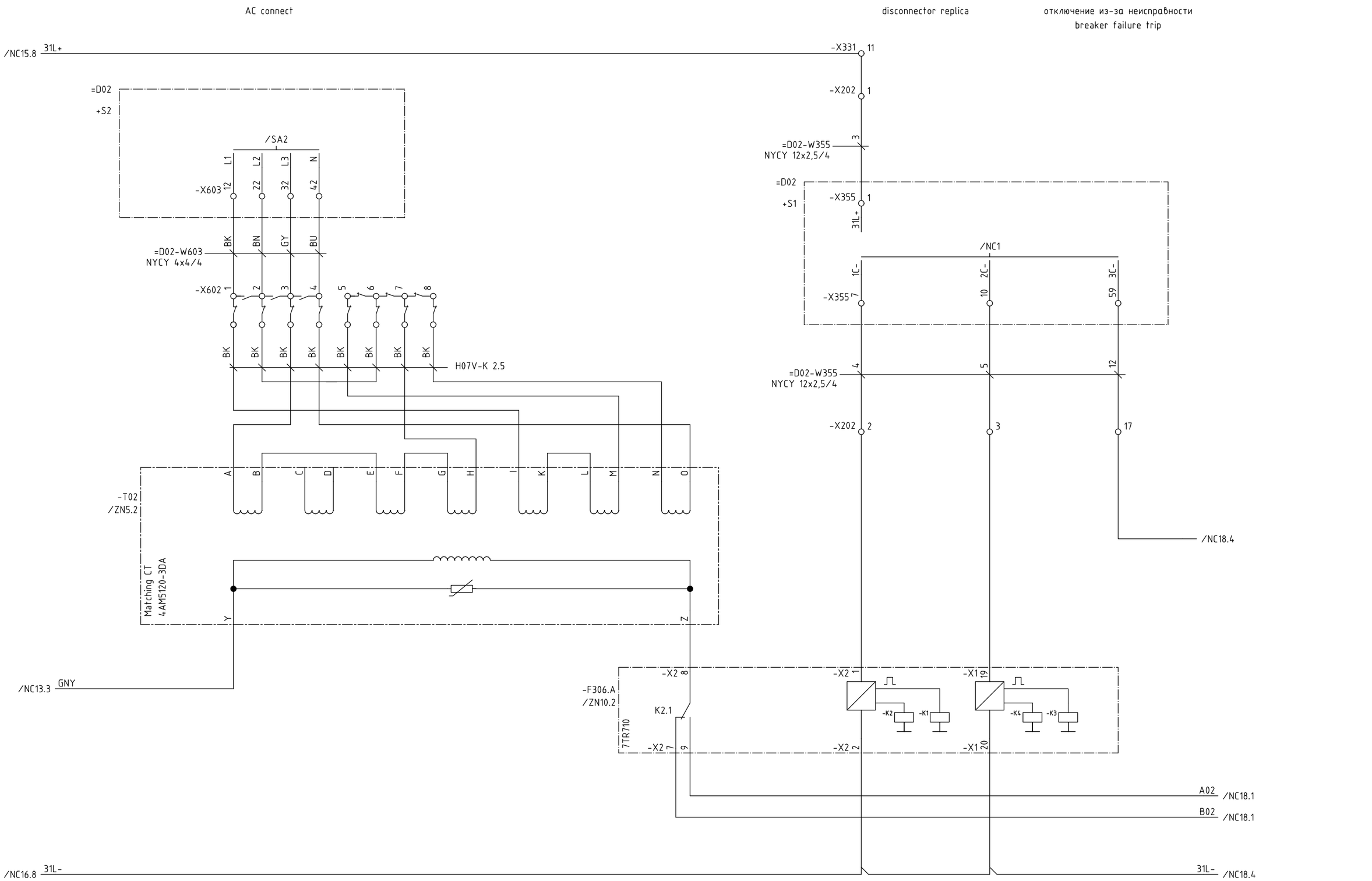

Вся проводка H07V-K 1,5 BK ,в случае отсутствия другой спецификации
wiring H07V-K 1,5 BK , if not otherwise specified

ELCAD-Version 7.1.0
Last used: 02.02.2007
Archive: = / S / NC / 17

Project: P:/Anl/GEO/Zestafoni_VO/710/050915_WR_indoor/D00_R1.pro
Symbol library 1: GeorgSym Translate file A: a-project.etr
Symbol library 2: PTD60617 Translate file B: b-Zestafoni_r.etr
Symbol library 3: H2_60617 Translate file C: C_FB_E.etr
Symbol library 4: Translate file D: d-Feld_e.etr

CopyRight (C) Siemens AG 2005 All Rights Reserved

				Date	31.03.05	Power Transmission Rehabilitation Program II	Siemens AG	BB protection		S	=D00
A	workshop rev.	13.09.05	Fra	Drawn	Witting	GSE Georgian State Electric System		Защита СШ			+R1
R1	AS BUILT	12.12.06	GRE	Appr.	Wolf	FICHTNER		busbar protection			NC17
Rev.	Remarks	Date	Name	Norm		Orig./Repl.f./Repl.by		Circuit diagram	(3)E50115-A2928-S324-R1		Sheet 17+ 20 Sh.

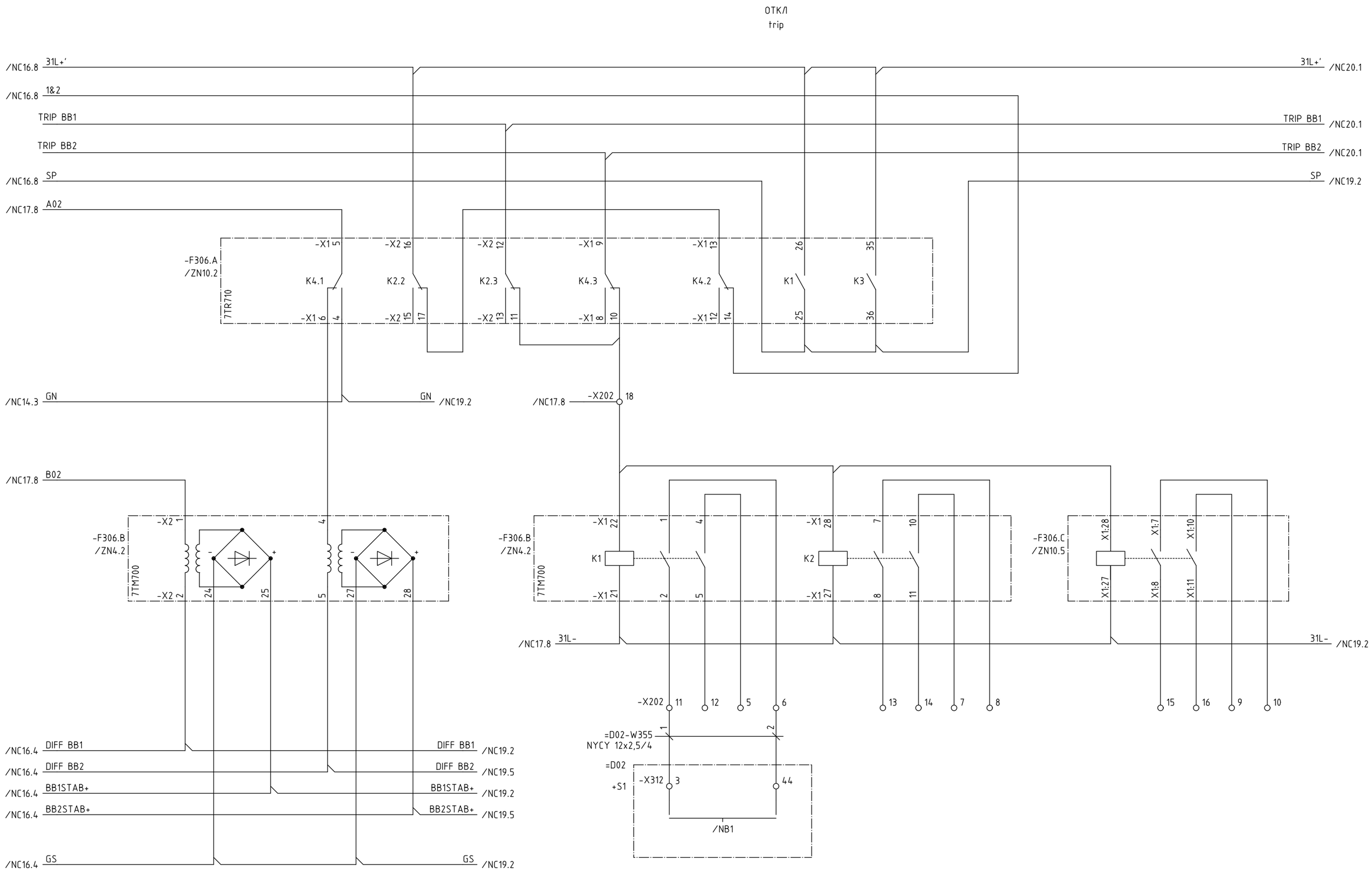

Вся проводка H07V-K 1,5 BK ,в случае отсутствия другой спецификации
wiring H07V-K 1,5 BK , if not otherwise specified

ELCAD-Version 7.1.0
Last used: 02.02.2007
Archive: = / S / NC / 18

Project: P:/Anl/GEO/Zestafoni_VO/710/050915_WR_indoor/D00_R1.pro
Symbol library 1: GeorgSym
Symbol library 2: PTD60617
Symbol library 3: H2_60617
Symbol library 4:
Translate file A: a-project.efr
Translate file B: b-Zestafoni_r.efr
Translate file C: C_FB_E.efr
Translate file D: d-Feld_e.efr

CopyRight (C) Siemens AG 2005 All Rights Reserved

				Date	31.03.05	Power Transmission Rehabilitation Program II	Siemens AG	BB protection	S	=D00
A	workshop rev.	13.09.05	Fra	Drawn	Witting	GSE Georgian State Electric System		Защита СШ		+R1 NC18
R1	AS BUILT	12.12.06	GRE	Appr.	Wolf	FICHTNER		busbar protection	(3)E50115-A2928-S324-R1	Sheet 18+
Rev.	Remarks	Date	Name	Norm		Orig./Repl.f./Repl.by		Circuit diagram		20 Sh.

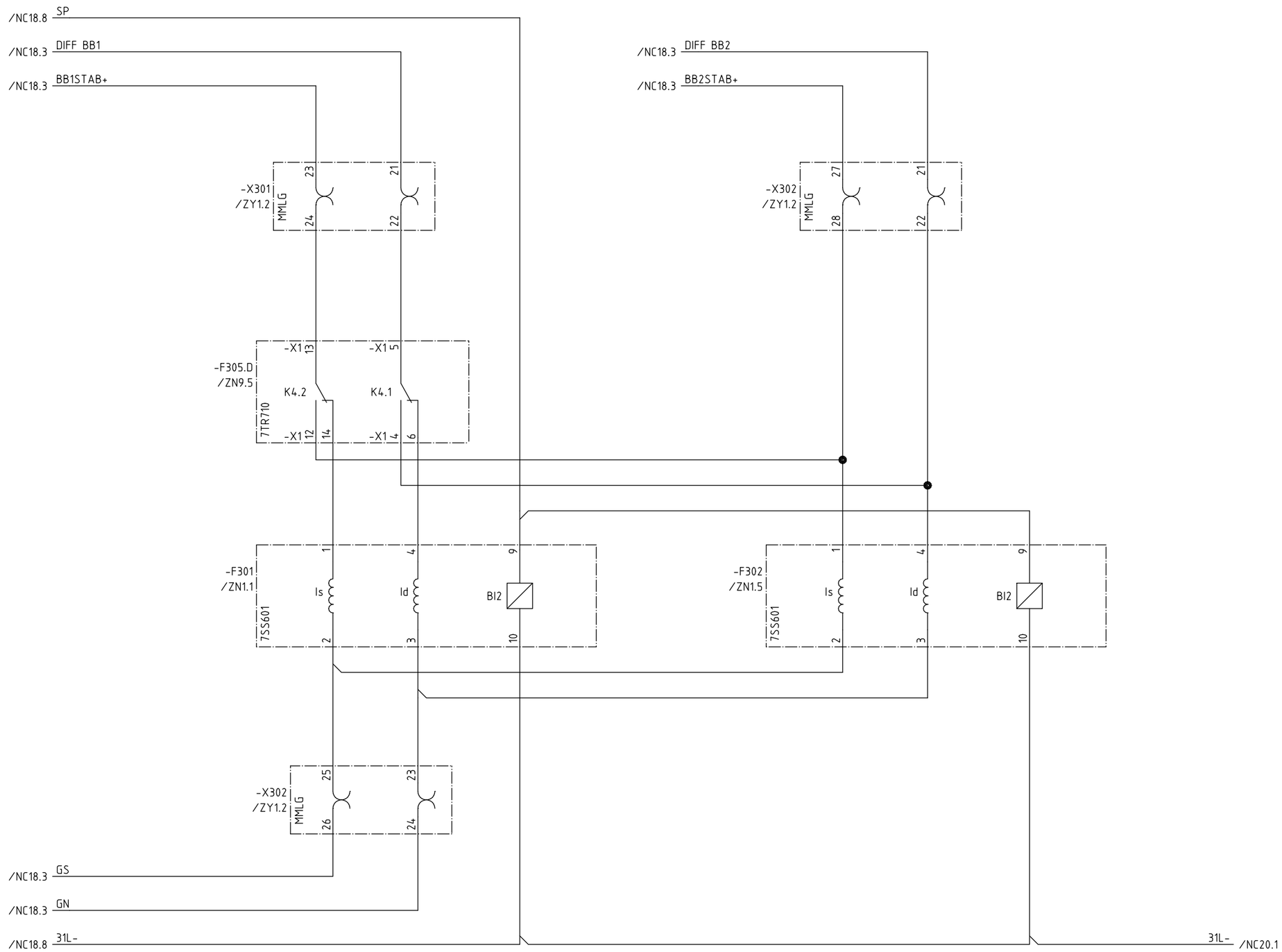

Вся проводка H07V-K 1,5 BK ,в случае отсутствия другой спецификации
wiring H07V-K 1,5 BK , if not otherwise specified

ELCAD-Version 7.1.0
Last used: 02.02.2007
Archive: = / S / NC / 19

Project: P:/Anl/GEO/Zestafoni_VO/710/050915_WR_indoor/D00_R1.pro
Translate file A: a-project.etr
Translate file B: b-Zestafoni_r.etr
Translate file C: C_FB_E.etr
Translate file D: d-Feld_e.etr

Symbol library 1: GeorgSym
Symbol library 2: PTD60617
Symbol library 3: H2_60617
Symbol library 4:

CopyRight (C) Siemens AG 2005 All Rights Reserved

				Date	31.03.05	Power Transmission Rehabilitation Program II	Siemens AG	BB protection	S	=D00	
A	workshop rev.	13.09.05	Fra	Drawn	Witting	GSE Georgian State Electric System		Защита СШ		+R1	NC19
R1	AS BUILT	12.12.06	GRE	Appr.	Wolf	FICHTNER		busbar protection	(3)E50115-A2928-S324-R1		Sheet 19+
Rev.	Remarks	Date	Name	Norm		Orig./Repl.f./Repl.by		Circuit diagram			20 Sh.

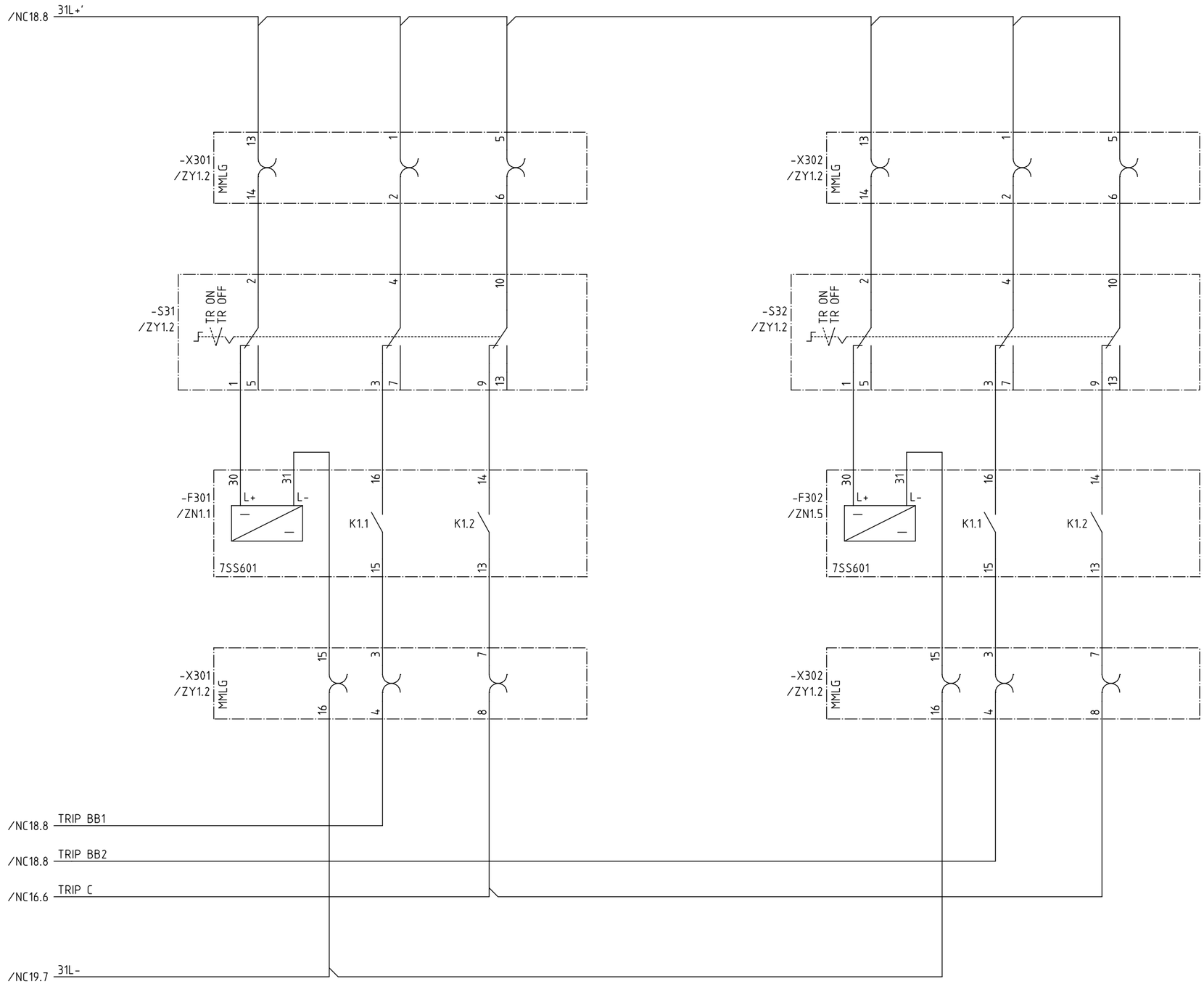

Вся проводка H07V-K 1,5 BK ,в случае отсутствия другой спецификации
wiring H07V-K 1,5 BK , if not otherwise specified

				Date	31.03.05	Power Transmission Rehabilitation Program II	Siemens AG	BB protection		S	=D00
A	workshop rev.	13.09.05	Fra	Drawn	Witting	GSE Georgian State Electric System		Защита СШ			+R1
R1	AS BUILT	12.12.06	GRE	Appr.	Wolf	FICHTNER		busbar protection			
Rev.	Remarks	Date	Name	Norm		Orig./Repl.f./Repl.by		Circuit diagram	(3)E50115-A2928-S324-R1		

NC20
Sheet 20-
20 Sh.

ELCAD-Version 7.1.0
Last used: 02.02.2007
Archive: = / S / NC / 20

Project: P:/Anl/GEO/Zestafoni_VO/710/050915_WR_indoor/D00_R1.pro
Symbol library 1: GeorgSym
Symbol library 2: PTD60617
Symbol library 3: H2_60617
Symbol library 4:
Translate file A: a-project.etr
Translate file B: b-Zestafoni_r.etr
Translate file C: C_FB_E.etr
Translate file D: d-Feld_e.etr

CopyRight (C) Siemens AG 2005 All Rights Reserved

ELCAD-Version 7.1.0
Last used: 02.02.2007
Archive: = / S / R / 1
Project: P:/Ani/GEO/Zestafoni_V0/710/050915_WR_indoor/D00_R1.pro
Symbol library 1: GeorgSym
Symbol library 2: PTD60617
Symbol library 3: H2_60617
Symbol library 4:
Translate file A: a-project.etr
Translate file B: b-Zestafoni_r.etr
Translate file C: C_FB_E.etr
Translate file D: d-Feld_e.etr
CopyRight (C) Siemens AG 2005 All Rights Reserved

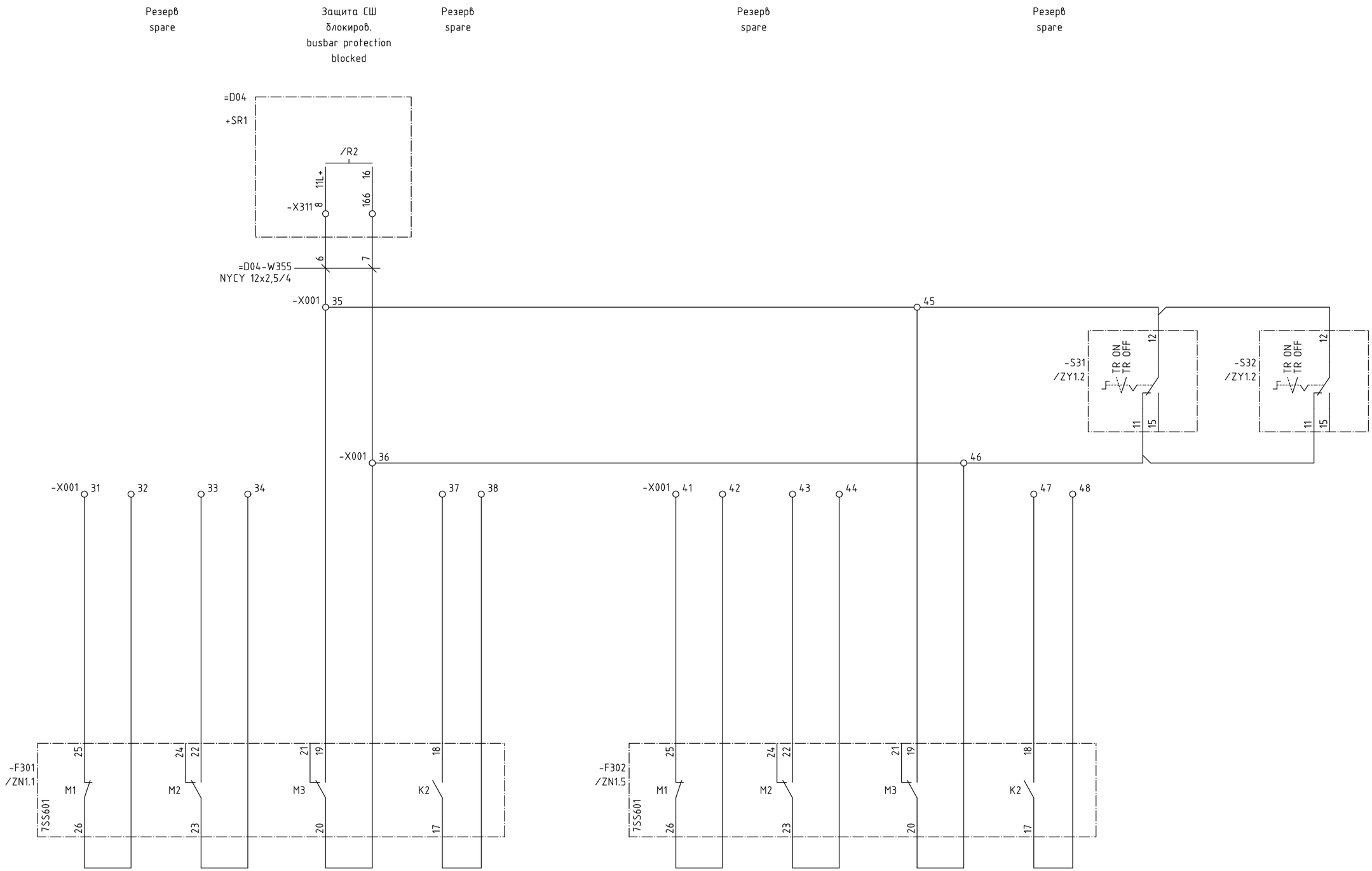

Вся проводка H07V-K 1,5 BK ,в случае отсутствия другой спецификации
wiring H07V-K 1,5 BK , if not otherwise specified

				Date	31.03.05	Power Transmission Rehabilitation Program II	Siemens AG	BB protection		S	=D00
A	workshop rev.	13.09.05	Fra	Drawn	Witting	GSE Georgian State Electric System		Сигналы			+R1
R1	AS BUILT	12.12.06	GRE	Appr.	Wolf	FICHTNER		alarms	(3)E50115-A2928-S336-R1		R1
Rev.	Remarks	Date	Name	Norm		Orig./Repl.f./Repl.by		Circuit diagram			Sheet 1- 1 Sh.

CopyRight (C) Siemens AG 2005 All Rights Reserved

Project: P:/Anl/GEO/Zestafoni_V0/710/050915_WR_indoor/D00_R1.pro
Symbol library 1: GeorgSym
Symbol library 2: PTD60617
Symbol library 3: H2_60617
Symbol library 4:
Translate file A: a-project.etr
Translate file B: b-Zestafoni_r.etr
Translate file C: C_FB_E.etr
Translate file D: d-Feld_e.etr
ELCAD-Version 7.1.0
Last used: 02.02.2007
Archive: = / S / ZN / 1

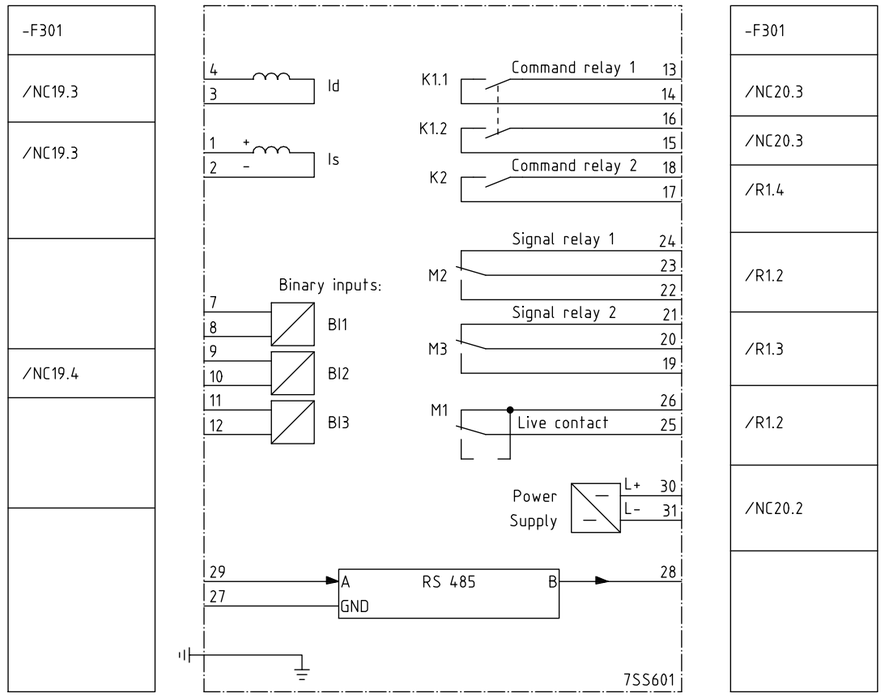

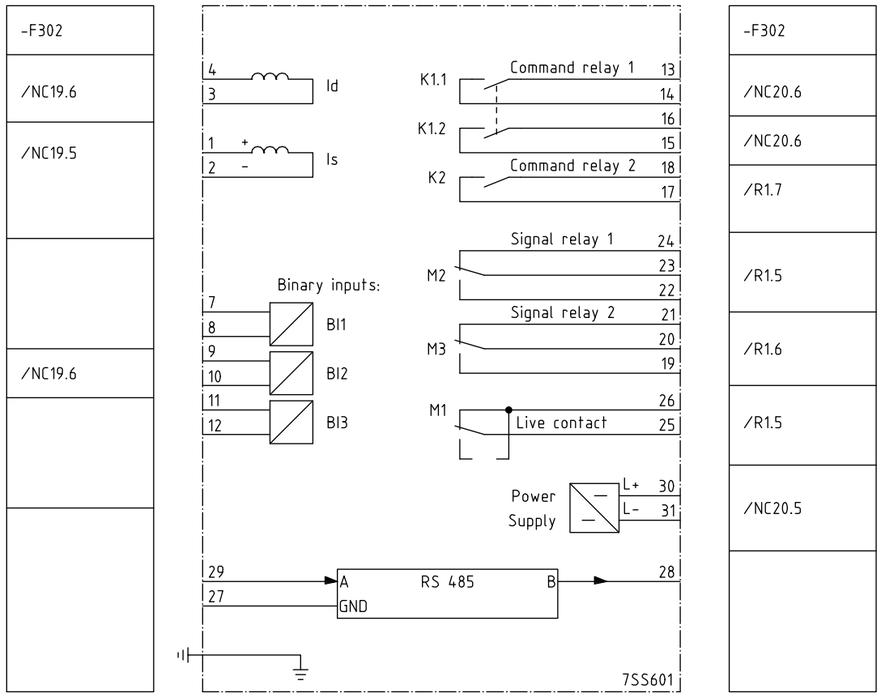

				Date	31.03.05	Power Transmission Rehabilitation Program II	Siemens AG	BB protection		S	=D00
A	workshop rev.	13.09.05	Fra	Drawn	Witting	GSE Georgian State Electric System		Защита			+R1
R1	AS BUILT	12.12.06	GRE	Appr.	Wolf	FICHTNER		protection	(3)E50115-A2928-S356-R1		
Rev.	Remarks	Date	Name	Norm		Orig./Repl.f./Repl.by		Circuit diagram			

ZN1
Sheet 1+
10 Sh.

CopyRight (C) Siemens AG 2005 All Rights Reserved

Project: P:/Anl/GEO/Zestafoni_V0/710/050915_WR_indoor/D00_R1.pro
Symbol library 1: GeorgSym
Symbol library 2: PTD60617
Symbol library 3: H2_60617
Symbol library 4:

Translate file A: a-project.etr
Translate file B: b-Zestafoni_r.etr
Translate file C: C_FB_E.etr
Translate file D: d-Feld_e.etr

ELCAD-Version 7.1.0
Last used: 02.02.2007

Archive: = / S / ZN / 2

-F303.B		-F303.B
/NC2.2		/NC2.2
/NC2.3		/NC2.3
/NC4.2		/NC4.2
/NC4.3		/NC4.3
/NC2.4		/NC2.5
		/NC2.5
/NC2.5		/NC2.6
		/NC2.6
/NC4.4		/NC4.5
		/NC4.5
/NC4.5		/NC4.6
		/NC4.6
/NC4.7		/NC4.7
		/NC4.7

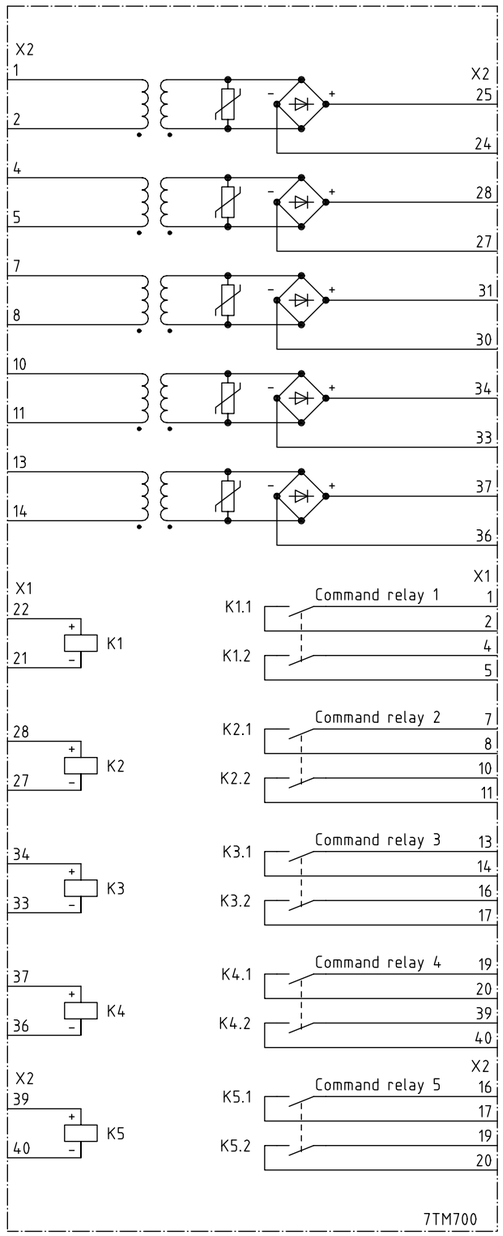

-F304.A		-F304.A
/NC6.2		/NC6.2
/NC6.3		/NC6.3
/NC8.2		/NC8.2
/NC8.3		/NC8.3
/NC6.4		/NC6.5
		/NC6.5
/NC6.5		/NC6.6
		/NC6.6
/NC8.4		/NC8.5
		/NC8.5
/NC8.5		/NC8.6
		/NC8.6
/NC8.7		/NC8.7
		/NC8.7

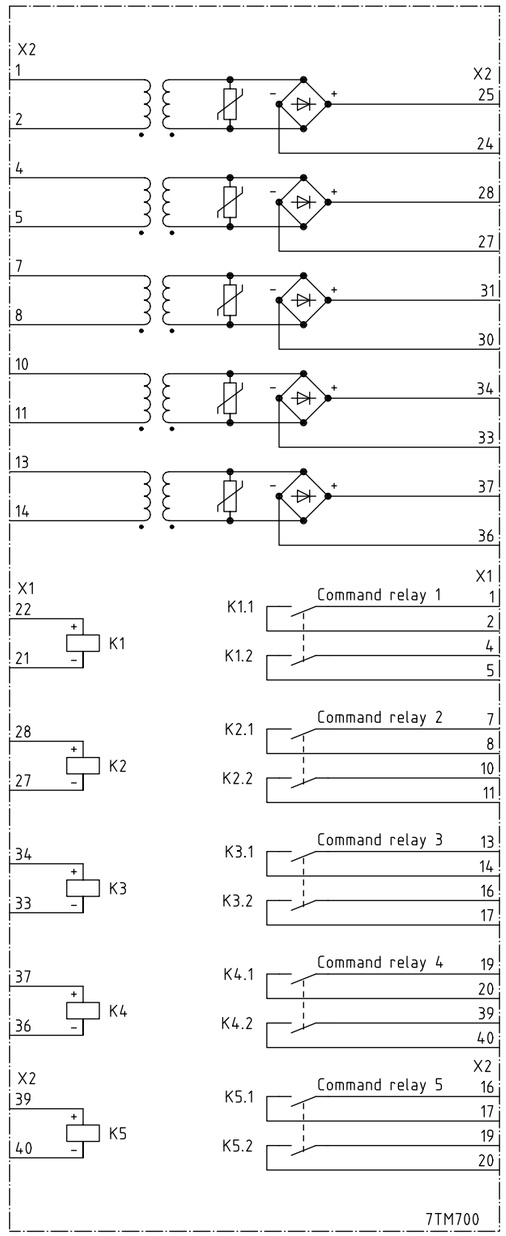

				Date	31.03.05	Power Transmission Rehabilitation Program II	Siemens AG	BB protection		S	=D00
A	workshop rev.	13.09.05	Fra	Drawn	Witting	GSE Georgian State Electric System		Защита			+R1
R1	AS BUILT	12.12.06	GRE	Appr.	Wolf	FICHTNER		protection	(3)E50115-A2928-S356-R1		ZN2
Rev.	Remarks	Date	Name	Norm		Orig./Repl.f./Repl.by		Circuit diagram			Sheet 2+ 10 Sh.

CopyRight (C) Siemens AG 2005 All Rights Reserved

Project: P:/Anl/GEO/Zestafoni_V0/710/050915_WR_indoor/D00_R1.pro
Symbol library 1: GeorgSym
Symbol library 2: PTD60617
Symbol library 3: H2_60617
Symbol library 4:

Translate file A: a-project.etr
Translate file B: b-Zestafoni_r.etr
Translate file C: C_FB_E.etr
Translate file D: d-Feld_e.etr

ELCAD-Version 7.1.0
Last used: 02.02.2007

Archive: = / S / ZN / 3

-F304.D		-F304.D
/NC10.2		/NC10.2
/NC10.3		/NC10.3
/NC12.2		/NC12.2
/NC12.3		/NC12.3
/NC10.4		/NC10.5
		/NC10.5
/NC10.5		/NC10.6
		/NC10.6
/NC12.4		/NC12.5
		/NC12.5
/NC12.5		/NC12.6
		/NC12.6
/NC12.7		/NC12.7
		/NC12.7

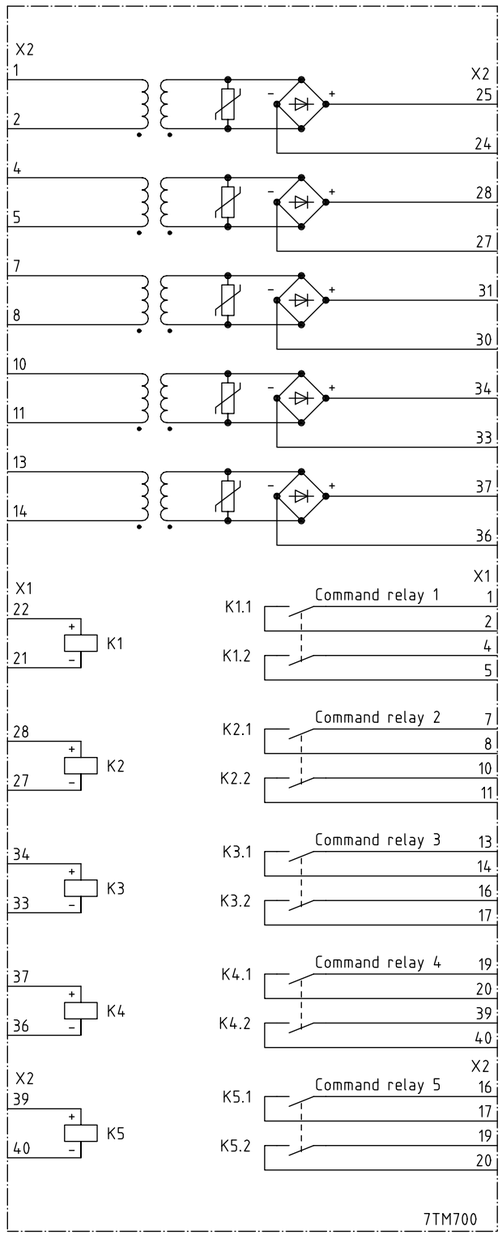

-F305.C		-F305.C
/NC14.2		/NC14.2
/NC14.3		/NC14.3
/NC16.2		/NC16.2
/NC16.3		/NC16.3
/NC14.4		/NC14.5
		/NC14.5
/NC14.5		/NC14.6
		/NC14.6
/NC16.4		/NC16.5
		/NC16.5
/NC16.5		/NC16.6
		/NC16.6
/NC16.7		/NC16.7
		/NC16.7

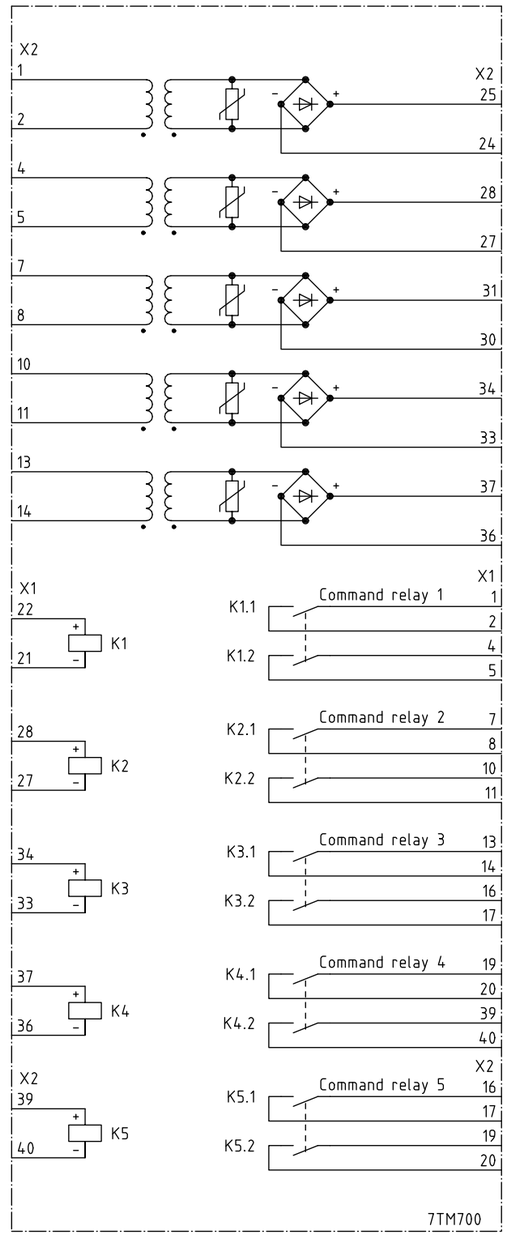

				Date	31.03.05	Power Transmission Rehabilitation Program II	Siemens AG	BB protection		S	=D00
A	workshop rev.	13.09.05	Fra	Drawn	Witting	GSE Georgian State Electric System		Защита			+R1
R1	AS BUILT	12.12.06	GRE	Appr.	Wolf	FICHTNER		protection	(3)E50115-A2928-S356-R1		ZN3
Rev.	Remarks	Date	Name	Norm		Orig./Repl.f./Repl.by		Circuit diagram			Sheet 3+ 10 Sh.

CopyRight (C) Siemens AG 2005 All Rights Reserved

Project: P:/Anl/GEO/Zestafoni_V0/710/050915_WR_indoor/D00_R1.pro
Symbol library 1: GeorgSym
Symbol library 2: PTD60617
Symbol library 3: H2_60617
Symbol library 4:
Translate file A: a-project.etr
Translate file B: b-Zestafoni_r.etr
Translate file C: C_FB_E.etr
Translate file D: d-Feld_e.etr
ELCAD-Version 7.1.0
Last used: 02.02.2007
Archive: = / S / ZN / 4

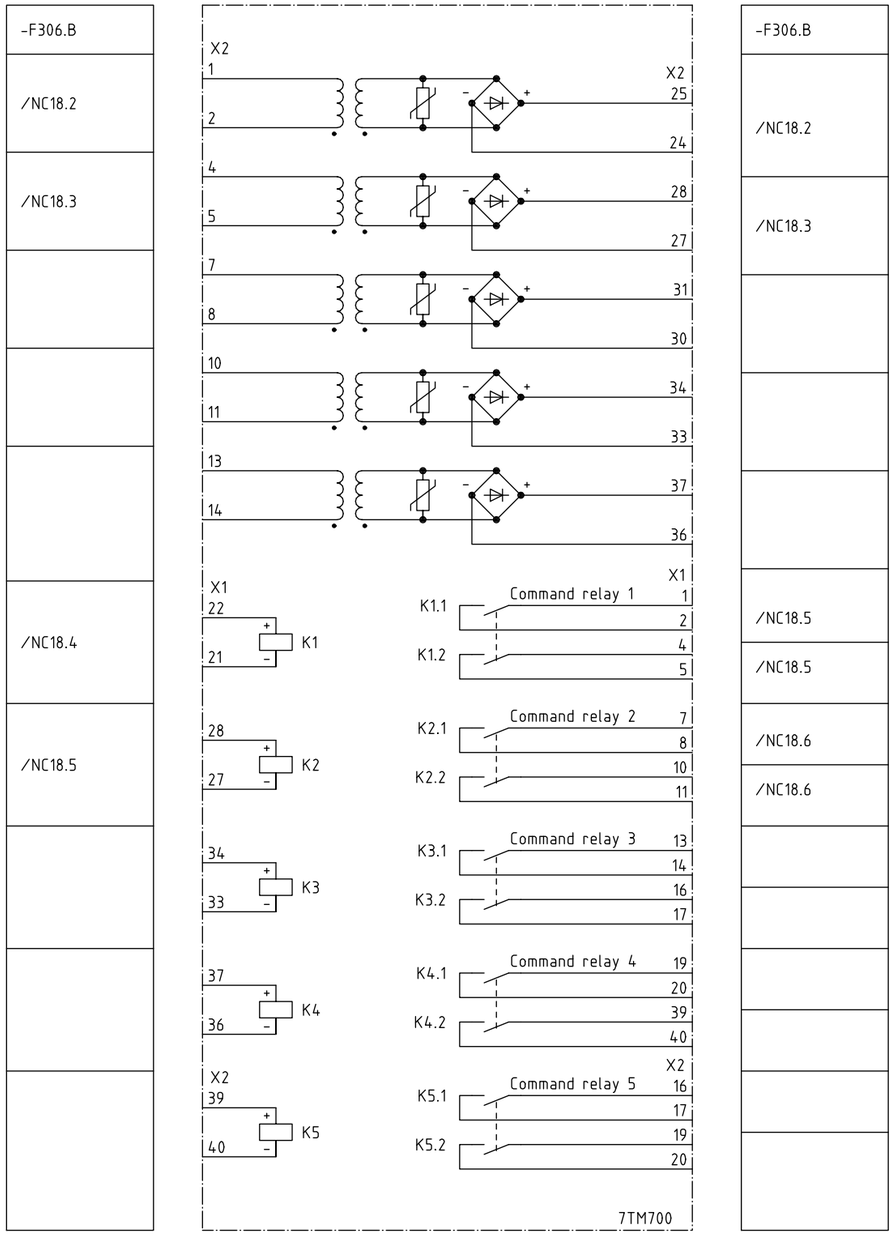

				Date	31.03.05	Power Transmission Rehabilitation Program II	Siemens AG	BB protection		S	=D00
A	workshop rev.	13.09.05	Fra	Drawn	Witting	GSE Georgian State Electric System		Защита			+R1
R1	AS BUILT	12.12.06	GRE	Appr.	Wolf	FICHTNER		protection	(3)E50115-A2928-S356-R1		ZN4
Rev.	Remarks	Date	Name	Norm		Orig./Repl.f./Repl.by		Circuit diagram			Sheet 4+ 10 Sh.

CopyRight (C) Siemens AG 2005 All Rights Reserved

Project: P:/Anl/GEO/Zestafoni_VO/710/050915_WR_indoor/D00_R1.pro
Symbol library 1: GeorgSym
Symbol library 2: PTD60617
Symbol library 3: H2_60617
Symbol library 4:
Translate file A: a-project.etr
Translate file B: b-Zestafoni_r.etr
Translate file C: C_FB_E.etr
Translate file D: d-Feld_e.etr

ELCAD-Version 7.1.0
Last used: 02.02.2007
Archive: = / S / ZN / 5

-T12	-T11	-T10	-T09	-T08	-T07	-T06	-T04	-T02
/NC1.2/NC1.2	/NC3.2/NC3.2	/NC5.2/NC5.2	/NC7.2/NC7.2	/NC9.2/NC9.2	/NC11.2/NC11.2	/NC13.2/NC13.2	/NC15.2/NC15.2	/NC17.2/NC17.2
/NC1.3	/NC3.3	/NC5.3	/NC7.3	/NC9.3	/NC11.3	/NC13.3	/NC15.3	/NC17.3
/NC1.3	/NC3.3	/NC5.3	/NC7.3	/NC9.3	/NC11.3	/NC13.3	/NC15.3	/NC17.3
/NC1.3	/NC3.3	/NC5.3	/NC7.3	/NC9.3	/NC11.3	/NC13.3	/NC15.3	/NC17.3
/NC1.4	/NC3.4	/NC5.4	/NC7.4	/NC9.4	/NC11.4	/NC13.4	/NC15.4	/NC17.4
/NC1.4	/NC3.4	/NC5.4	/NC7.4	/NC9.4	/NC11.4	/NC13.4	/NC15.4	/NC17.4
/NC1.5	/NC3.5	/NC5.5	/NC7.5	/NC9.5	/NC11.5	/NC13.5	/NC15.5	/NC17.5

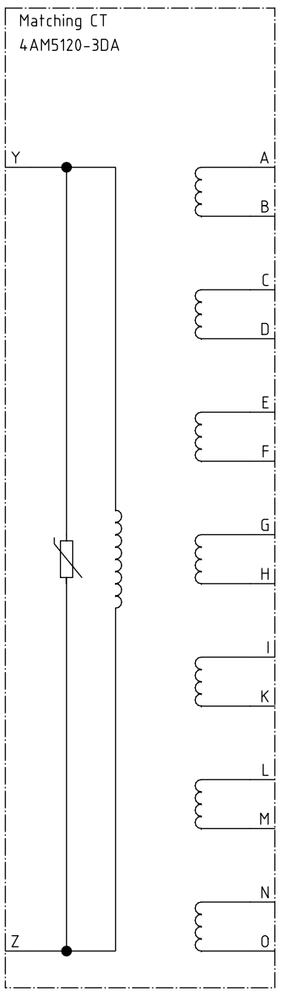

Rev.	Remarks	Date	Name	
A	workshop rev.	13.09.05	Fra	Date 31.03.05
R1	AS BUILT	12.12.06	GRE	Drawn Witting
				Appr. Wolf

Norm

Power Transmission Rehabilitation Program II
GSE Georgian State Electric System
FICHTNER

Siemens AG

Orig./Repl.f./Repl.by

BB protection
Защита
protection
Circuit diagram

S =D00
+R1

(3)E50115-A2928-S356-R1

ZN5
Sheet 5+
10 Sh.

CopyRight (C) Siemens AG 2005 All Rights Reserved

Project: P:/Anl/GEO/Zestafoni_V0/710/050915_WR_indoor/D00_R1.pro
Symbol library 1: GeorgSym
Symbol library 2: PTD60617
Symbol library 3: H2_60617
Symbol library 4:

Translate file A: a-project.etr
Translate file B: b-Zestafoni_r.etr
Translate file C: C_FB_E.etr
Translate file D: d-Feld_e.etr

ELCAD-Version 7.1.0
Last used: 02.02.2007

Archive: = / S / ZN / 6

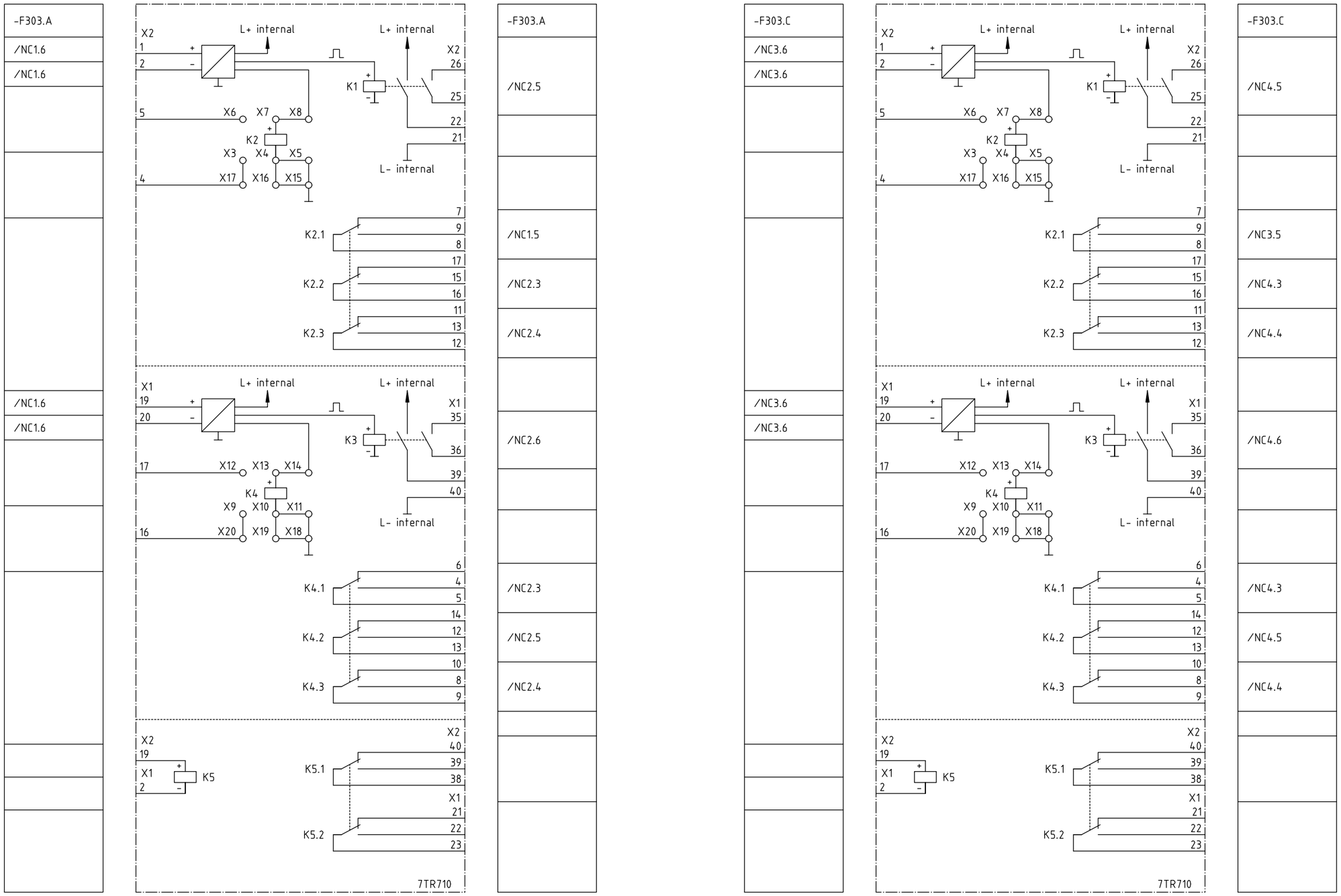

				Date	31.03.05	Power Transmission Rehabilitation Program II	Siemens AG	BB protection		S	=D00
A	workshop rev.	13.09.05	Fra	Drawn	Witting	GSE Georgian State Electric System		Защита			+R1
R1	AS BUILT	12.12.06	GRE	Appr.	Wolf	FICHTNER		protection	(3)E50115-A2928-S356-R1		ZN6
Rev.	Remarks	Date	Name	Norm		Orig./Repl.f./Repl.by		Circuit diagram			Sheet 6+ 10 Sh.

CopyRight (C) Siemens AG 2005 All Rights Reserved

Project: P:/Anl/GEO/Zestafoni_V0/710/050915_WR_indoor/D00_R1.pro
Symbol library 1: GeorgSym
Symbol library 2: PTD60617
Symbol library 3: H2_60617
Symbol library 4:

Translate file A: a-project.etr
Translate file B: b-Zestafoni_r.etr
Translate file C: C_FB_E.etr
Translate file D: d-Feld_e.etr

ELCAD-Version 7.1.0
Last used: 02.02.2007

Archive: = / S / ZN / 7

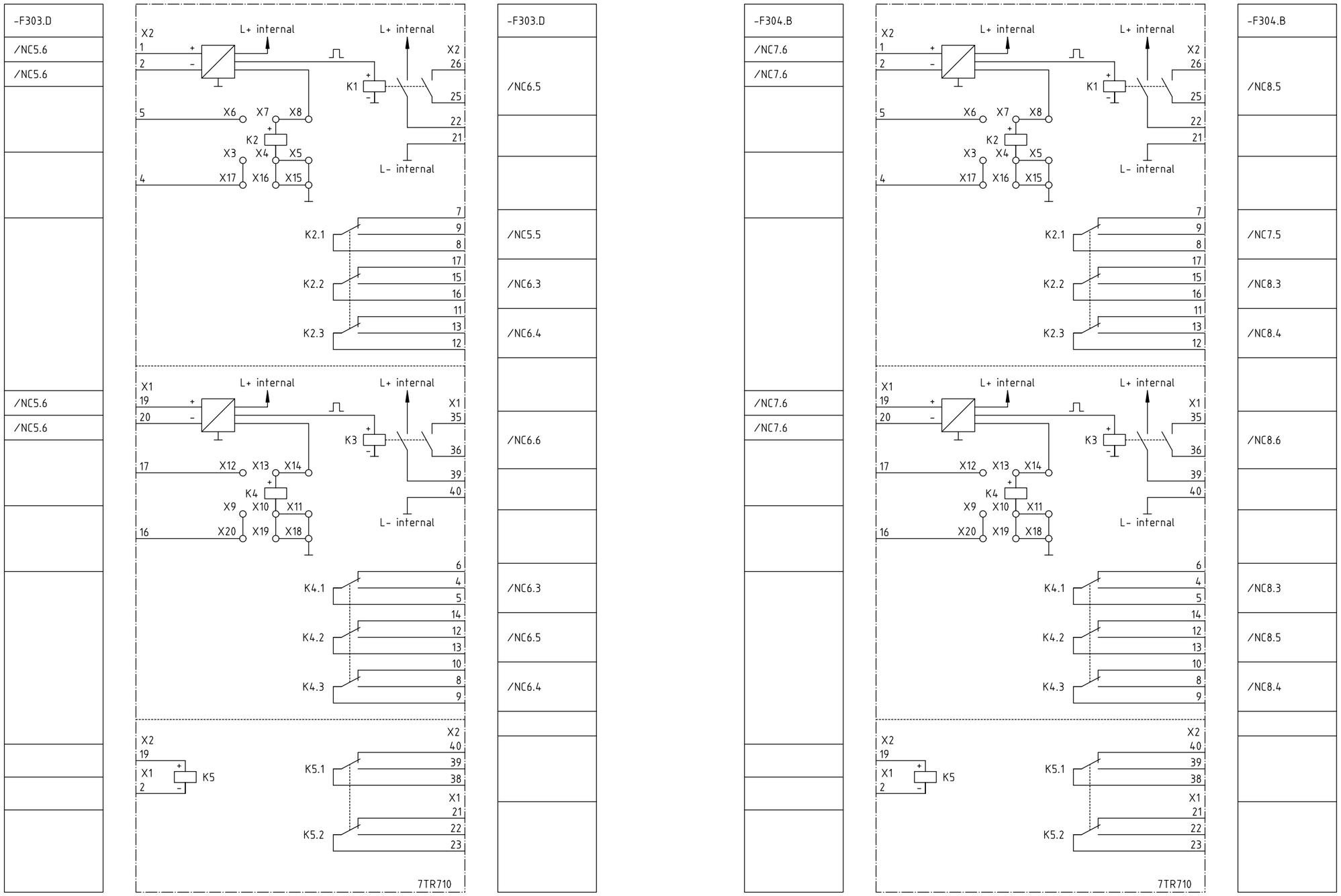

				Date	31.03.05	Power Transmission Rehabilitation Program II	Siemens AG	BB protection		S	=D00
A	workshop rev.	13.09.05	Fra	Drawn	Witting	GSE Georgian State Electric System		Защита			+R1
R1	AS BUILT	12.12.06	GRE	Appr.	Wolf	FICHTNER		protection			ZN7
Rev.	Remarks	Date	Name	Norm		Orig./Repl.f./Repl.by		Circuit diagram	(3)E50115-A2928-S356-R1		Sheet 7+ 10 Sh.

CopyRight (C) Siemens AG 2005 All Rights Reserved

Project: P:/Anl/GEO/Zestafoni_V0/710/050915_WR_indoor/D00_R1.pro
Symbol library 1: GeorgSym
Symbol library 2: PTD60617
Symbol library 3: H2_60617
Symbol library 4:
Translate file A: a-project.etr
Translate file B: b-Zestafoni_r.etr
Translate file C: C_FB_E.etr
Translate file D: d-Feld_e.etr
ELCAD-Version 7.1.0
Last used: 02.02.2007
Archive: = / S / ZN / 8

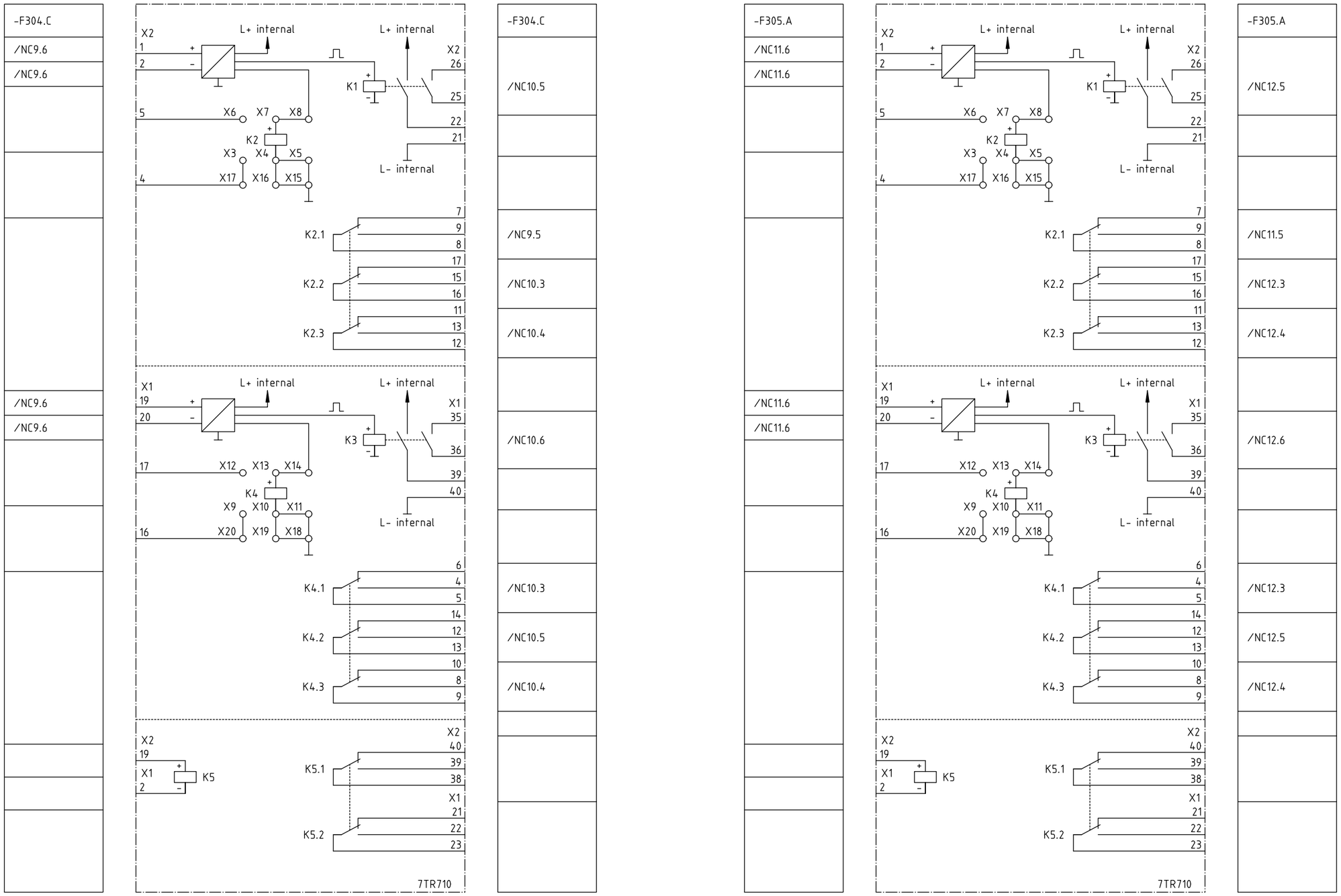

				Date	31.03.05	Power Transmission Rehabilitation Program II	Siemens AG	BB protection		S	=D00
A	workshop rev.	13.09.05	Fra	Drawn	Witting	GSE Georgian State Electric System		Защита			+R1 ZN8
R1	AS BUILT	12.12.06	GRE	Appr.	Wolf	FICHTNER		protection	(3)E50115-A2928-S356-R1		Sheet 8+
Rev.	Remarks	Date	Name	Norm		Orig./Repl.f./Repl.by		Circuit diagram			10 Sh.

CopyRight (C) Siemens AG 2005 All Rights Reserved

Project: P:/Anl/GEO/Zestafoni_V0/710/050915_WR_indoor/D00_R1.pro
Symbol library 1: GeorgSym
Symbol library 2: PTD60617
Symbol library 3: H2_60617
Symbol library 4:

Translate file A: a-project.etr
Translate file B: b-Zestafoni_r.etr
Translate file C: C_FB_E.etr
Translate file D: d-Feld_e.etr

ELCAD-Version 7.1.0
Last used: 02.02.2007

Archive: = / S / ZN / 9

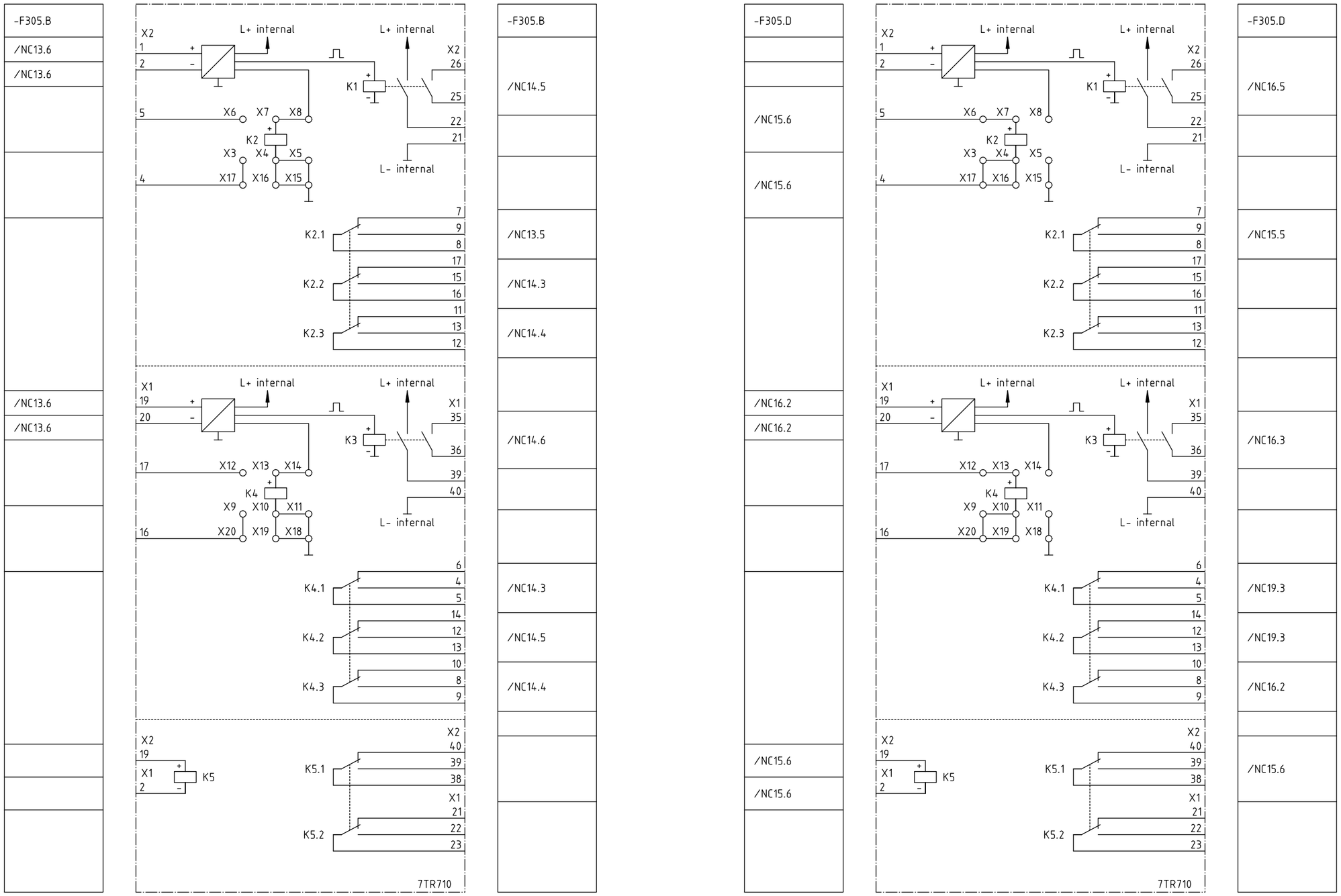

				Date	31.03.05	Power Transmission Rehabilitation Program II	Siemens AG	BB protection		S	=D00
A	workshop rev.	13.09.05	Fra	Drawn	Witting	GSE Georgian State Electric System		Защита			+R1
R1	AS BUILT	12.12.06	GRE	Appr.	Wolf	FICHTNER		protection	(3)E50115-A2928-S356-R1		ZN9
Rev.	Remarks	Date	Name	Norm		Orig./Repl.f./Repl.by		Circuit diagram			Sheet 9+ 10 Sh.

CopyRight (C) Siemens AG 2005 All Rights Reserved

Project: P:/Anl/GEO/Zestafoni_V0/710/050915_WR_indoor/D00_R1.pro
Symbol library 1: GeorgSym
Symbol library 2: PTD60617
Symbol library 3: H2_60617
Symbol library 4:

Translate file A: a-project.etr
Translate file B: b-Zestafoni_r.etr
Translate file C: C_FB_E.etr
Translate file D: d-Feld_e.etr

ELCAD-Version 7.1.0
Last used: 02.02.2007

Archive: = / S / ZN / 10

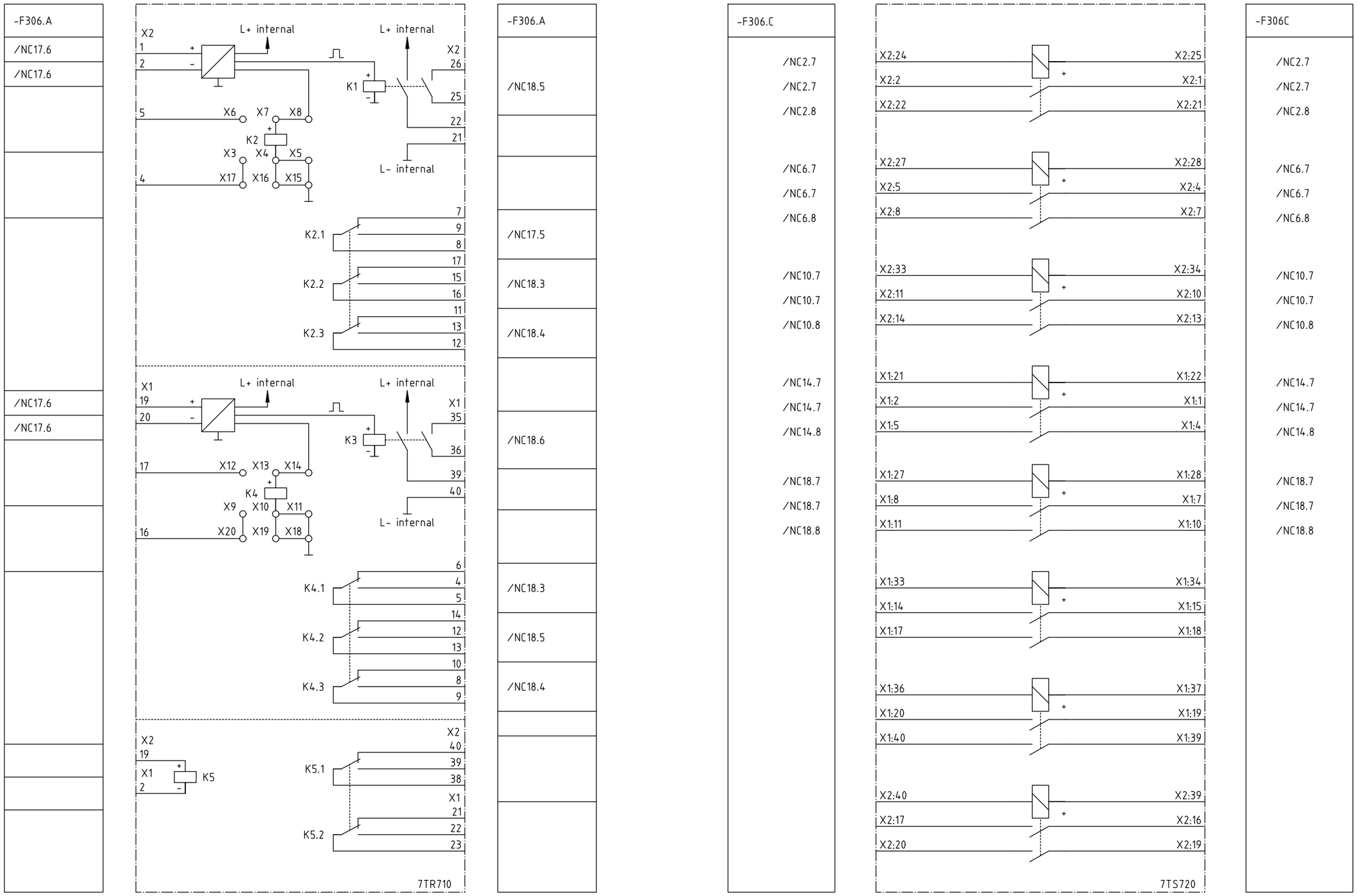

				Date	31.03.05	Power Transmission Rehabilitation Program II	Siemens AG	BB protection		S	=D00
A	workshop rev.	13.09.05	Fra	Drawn	Witting	GSE Georgian State Electric System		Защита			+R1 ZN10
R1	AS BUILT	12.12.06	GRE	Appr.	Wolf	FICHTNER		protection	(3)E50115-A2928-S356-R1		Sheet 10-
Rev.	Remarks	Date	Name	Norm		Orig./Repl.f./Repl.by		Circuit diagram			10 Sh.

CopyRight (C) Siemens AG 2005 All Rights Reserved

V1.0.0 14.06.2004

Project: P:/Anl/GEO/Zestafoni_VO/710/050915_WR_indoor/D00_R1.pro
Symbol library 1: GeorgSym
Symbol library 2: PTD60617
Symbol library 3: H2_60617
Symbol library 4:

Translate file A: a-project.etr
Translate file B: b-Zestafoni_r.etr
Translate file C: C_FB_E.etr
Translate file D: d-Feld_e.etr

ELCAD-Version 7.1.0
Last used: 02.02.2007

Archive: = / S / ZY / 1

Rev.	Remarks	Date	Name	Norm	Date	
A	workshop rev.	13.09.05	Fra	Drawn	31.03.05	Power Transmission Rehabilitation Program II
R1	AS BUILT	12.12.06	GRE	Appr.		GSE Georgian State Electric System
				Wolf		FICHTNER

Orig./Repl.f./Repl.by

Siemens AG

BB protection
Вспомогательное оборуд.
auxiliary equipment
Circuit diagram

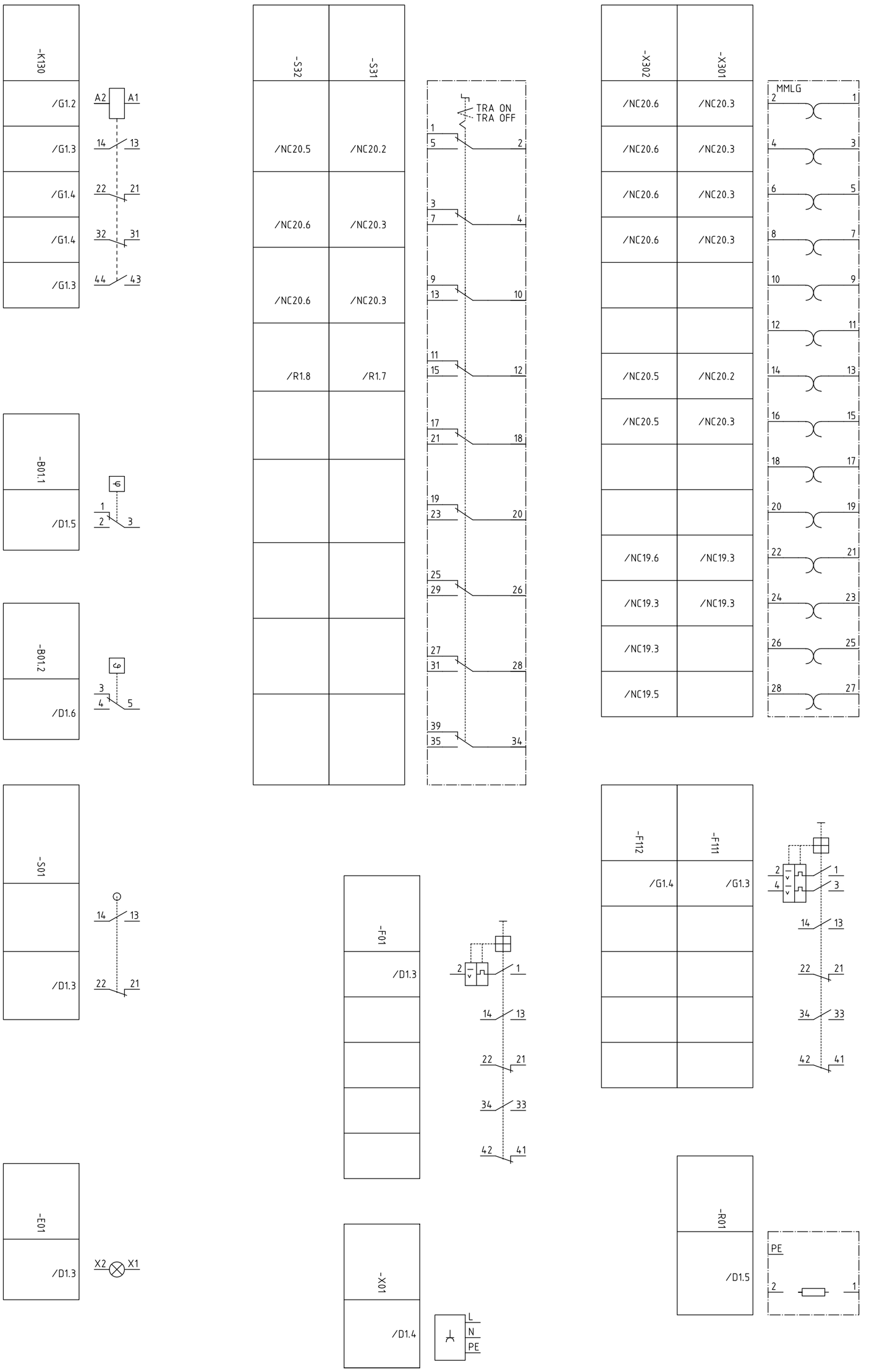

S	=D00	
	+R1	ZY1
		Sheet 1-
		1 Sh.

(3)E50115-A2928-S359-R1

quantity Menge	description and function	identifcation no. Bestelldaten	manufacturer Hersteller	identification Kurzzeichen
1	OVAL LUMINAIRE PLASTIC 60W , E27 GREY WITH INCANDESCENT LAMP 60W, E27 (CUBICLE ILLUMINATION	ZIR: 50500.009 + OSR: CLAS A FR 60	ZIMMERMANN OSRAM	=D00+R1 -E01
1	MINI CIRCUIT BREAKER AC 1 POLE, 10A Icu=10kA C -CHARAKTERISTIC WITH AUXILLIARY CONTACTS !NO+1NC (CONTROL CUBICLE)	5SY5110-7 + 2x 5ST3010	SIEMENS	=D00+R1 -F01
1	MINI CIRCUIT BREAKER DC 2 POLE, 6A Icu=10kA C -CHARAKTERISTIC WITH AUXILLIARY CONTACTS !NO+1NC (CONTROL GENERAL)	5SY5206-7 + 2x 5ST3010	SIEMENS	=D00+R1 -F111
1	MINI CIRCUIT BREAKER DC 2 POLE, 4A Icu=10kA C -CHARAKTERISTIC WITH AUXILLIARY CONTACTS !NO+1NC (CONTROL 2)	5SY5204-7 + 2x 5ST3010	SIEMENS	=D00+R1 -F112
1	MEASURING UNIT (BB1 DIFF; PROTECTION)	7SS6010-5EA00-00AA0	SIEMENS (BEISTELLUNG PTDH)	=D00+R1 -F301
1	MEASURING UNIT (BB2 DIFF; PROTECTION)	7SS6010-5EA00-00AA0	SIEMENS (BEISTELLUNG PTDH)	=D00+R1 -F302

1	STABILISATION UNIT (BUSBAR DIFF PROTECTION)	7TM7000-0AA00-0AA0	SIEMENS (BEISTELLUNG PTDH)	=D00+R1 -F303.B
1	STABILISATION UNIT (BUSBAR DIFF PROTECTION)	7TM7000-0AA00-0AA0	SIEMENS (BEISTELLUNG PTDH)	=D00+R1 -F304.A
1	STABILISATION UNIT (BUSBAR DIFF PROTECTION)	7TM7000-0AA00-0AA0	SIEMENS (BEISTELLUNG PTDH)	=D00+R1 -F304.D
1	STABILISATION UNIT (BUSBAR DIFF PROTECTION)	7TM7000-0AA00-0AA0	SIEMENS (BEISTELLUNG PTDH)	=D00+R1 -F305.C
1	STABILISATION UNIT (BUSBAR DIFF PROTECTION)	7TM7000-0AA00-0AA0	SIEMENS (BEISTELLUNG PTDH)	=D00+R1 -F306.D
1	ISOLATOR REPLICA UNIT (BUSBAR DIFF PROTECTION)	7TR7100_5AA00-0AA0	SIEMENS (BEISTELLUNG PTDH)	=D00+R1 -F303.A
1	ISOLATOR REPLICA UNIT (BUSBAR DIFF PROTECTION)	7TR7100_5AA00-0AA0	SIEMENS (BEISTELLUNG PTDH)	=D00+R1 -F303.C

1	ISOLATOR REPLICA UNIT (BUSBAR DIFF PROTECTION)	7TR7100_5AA00-0AA0	SIEMENS (BEISTELLUNG PTDH)	=D00+R1 -F303.D
1	ISOLATOR REPLICA UNIT (BUSBAR DIFF PROTECTION)	7TR7100_5AA00-0AA0	SIEMENS (BEISTELLUNG PTDH)	=D00+R1 -F304.B
1	ISOLATOR REPLICA UNIT (BUSBAR DIFF PROTECTION)	7TR7100_5AA00-0AA0	SIEMENS (BEISTELLUNG PTDH)	=D00+R1 -F304.C
1	ISOLATOR REPLICA UNIT (BUSBAR DIFF PROTECTION)	7TR7100_5AA00-0AA0	SIEMENS (BEISTELLUNG PTDH)	=D00+R1 -F305.A
1	ISOLATOR REPLICA UNIT (BUSBAR DIFF PROTECTION)	7TR7100_5AA00-0AA0	SIEMENS (BEISTELLUNG PTDH)	=D00+R1 -F305.B
1	ISOLATOR REPLICA UNIT (BUSBAR DIFF PROTECTION)	7TR7100_5AA00-0AA0	SIEMENS (BEISTELLUNG PTDH)	=D00+R1 -F305.D
1	ISOLATOR REPLICA UNIT (BUSBAR DIFF PROTECTION)	7TR7100-5AA00-0AA0	SIEMENS (BEISTELLUNG PTDH)	=D00+R1 -F306.A

1	HOUSING 1/2 19" (BUSBAR DIFF PROTECTION)	7XP2041-2MA-0AA0	SIEMENS (BEISTELLUNG PTDH)	=D00+R1 -F303
1	HOUSING 1/2 19" (BUSBAR DIFF PROTECTION)	7XP2041-2MA-0AA0	SIEMENS (BEISTELLUNG PTDH)	=D00+R1 -F304
1	HOUSING 1/2 19" (BUSBAR DIFF PROTECTION)	7XP2041-2MA-0AA0	SIEMENS (BEISTELLUNG PTDH)	=D00+R1 -F305
1	HOUSING 1/2 19" (BUSBAR DIFF PROTECTION)	7XP2041-2MA-0AA0	SIEMENS (BEISTELLUNG PTDH)	=D00+R1 -F306
6	SMALL MATERIL FOR FIXING	C73165-A63-C200-3	SIEMENS	
1	SUMMARY TRANSFORMER 1A (BUSBAR DIFF PROTECTION)	4AM5120-3DA00-0AN2	SIEMENS	=D00-R1 -T02
1	SUMMARY TRANSFORMER 1A (BUSBAR DIFF PROTECTION)	4AM5120-3DA00-0AN2	SIEMENS	=D00-R1 -T04

1	SUMMARY TRANSFORMER 1A (BUSBAR DIFF PROTECTION)	4AM5120-3DA00-0AN2	SIEMENS	=D00-R1 -T06
1	SUMMARY TRANSFORMER 1A (BUSBAR DIFF PROTECTION)	4AM5120-3DA00-0AN2	SIEMENS	=D00-R1 -T07
1	SUMMARY TRANSFORMER 1A (BUSBAR DIFF PROTECTION)	4AM5120-3DA00-0AN2	SIEMENS	=D00-R1 -T08
1	SUMMARY TRANSFORMER 1A (BUSBAR DIFF PROTECTION)	4AM5120-3DA00-0AN2	SIEMENS	=D00-R1 -T09
1	SUMMARY TRANSFORMER 1A (BUSBAR DIFF PROTECTION)	4AM5120-3DA00-0AN2	SIEMENS	=D00-R1 -T10
1	SUMMARY TRANSFORMER 1A (BUSBAR DIFF PROTECTION)	4AM5120-3DA00-0AN2	SIEMENS	=D00-R1 -T11
1	SUMMARY TRANSFORMER 1A (BUSBAR DIFF PROTECTION)	4AM5120-3DA00-0AN2	SIEMENS	=D00-R1 -T12

1	AUXILIARY RELAY 2NO+2NC CONTACTS,220V DC BB-VOLTAGE SELECTION	3RH1122-1BM40	SIEMENS	=D00+R1 -K130
1	HEATING 50W TYPE SK3115 (CUBICLE HEATING)	TYPE SK3115 NO 3115.00	RITTAL	=D00+R1 -R01
1	KEY CONTROL SWITCH 9X CHANGE OVER KEY OPERATION + LABEL TYP 301 K (PROTECTION 1)	CH10A373-600 + V750D/A 2G + 90.100.1454.0	KRAUS UND NAIMER KRAUS UND NAIMER WIELAND	=D00+R1 -S31
1	KEY CONTROL SWITCH 9X CHANGE OVER KEY OPERATION + LABEL TYP 301 K (PROTECTION 2)	CH10A373-600 + V750D/A 2G + 90.100.1454.0	KRAUS UND NAIMER KRAUS UND NAIMER WIELAND	=D00+R1 -S32
1	POSITION SWITCH 1NO+1NC (CUBICLE ILLUMINATION)	3SE3020-1A	SIEMENS	=D00+R1 -S01
1	TESTBLOCK + LABEL TYP 301 K (BUSBAR PROTECTION)	MMLG02 + 90.100.1454.0	ALLSTOM (BEISTELLUNG PTDH) WIELAND	=D00+R1 -X301
1	TESTBLOCK + LABEL TYP 301 K (BUSBSBAR PROTECTION)	MMLG02 + 90.100.1454.0	ALLSTOM (BEISTELLUNG PTDH) WIELAND	=D00+R1 -X302

1	SOCKET (CUBICLE SOCKET)	5TE6700	SIEMENS	=D00+R1 -X01

Project: P:/Anl/GEO/Zestafoni_V0/710/050915_WR_indoor/D00_R1.pro
Symbol library 1: GeorgSym
Symbol library 2: PTD60617
Symbol library 3: H2_60617
Symbol library 4:

Translate file A: a-project.etr
Translate file B: b-Zestafoni_r.etr
Translate file C: C_FB_E.etr
Translate file D: d-Feld_e.etr

ELCAD-Version 7.1.0
Last used: 02.02.2007

Archive: = / U / US / 1

CopyRight (C) Siemens AG 2005 All Rights Reserved

Вид спереди с дверью
front view with door

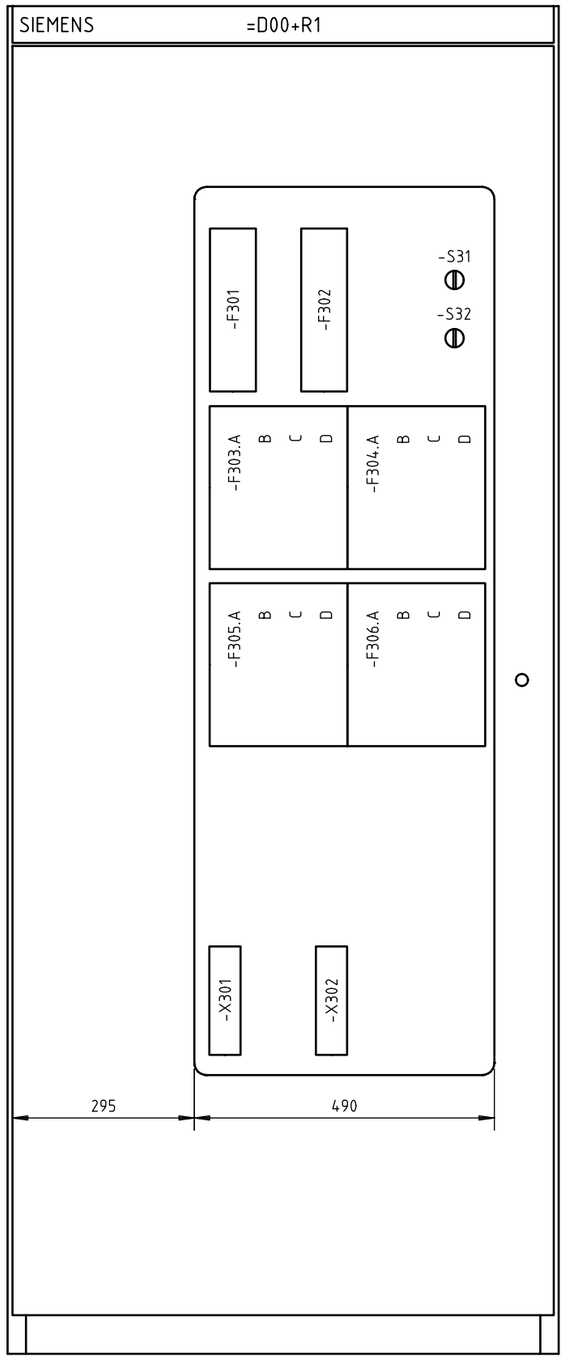

				Date	31.03.05	Power Transmission Rehabilitation Program II	Siemens AG	BB protection		U	=D00	
A	workshop rev.	13.09.05	Fra	Drawn	Witting	GSE Georgian State Electric System		Структурные чертежи			+R1	US1
R1	AS BUILT	12.12.06	GRE	Appr.	Wolf	FICHTNER		arrangement drawings	(3)E50115-A2928-V366-R1			Sheet 1+
Rev.	Remarks	Date	Name	Norm		Orig./Repl.f./Repl.by		Arrangement drawing				2 Sh.

Вид спереди с вращающейся рамой
front view with hinged frame

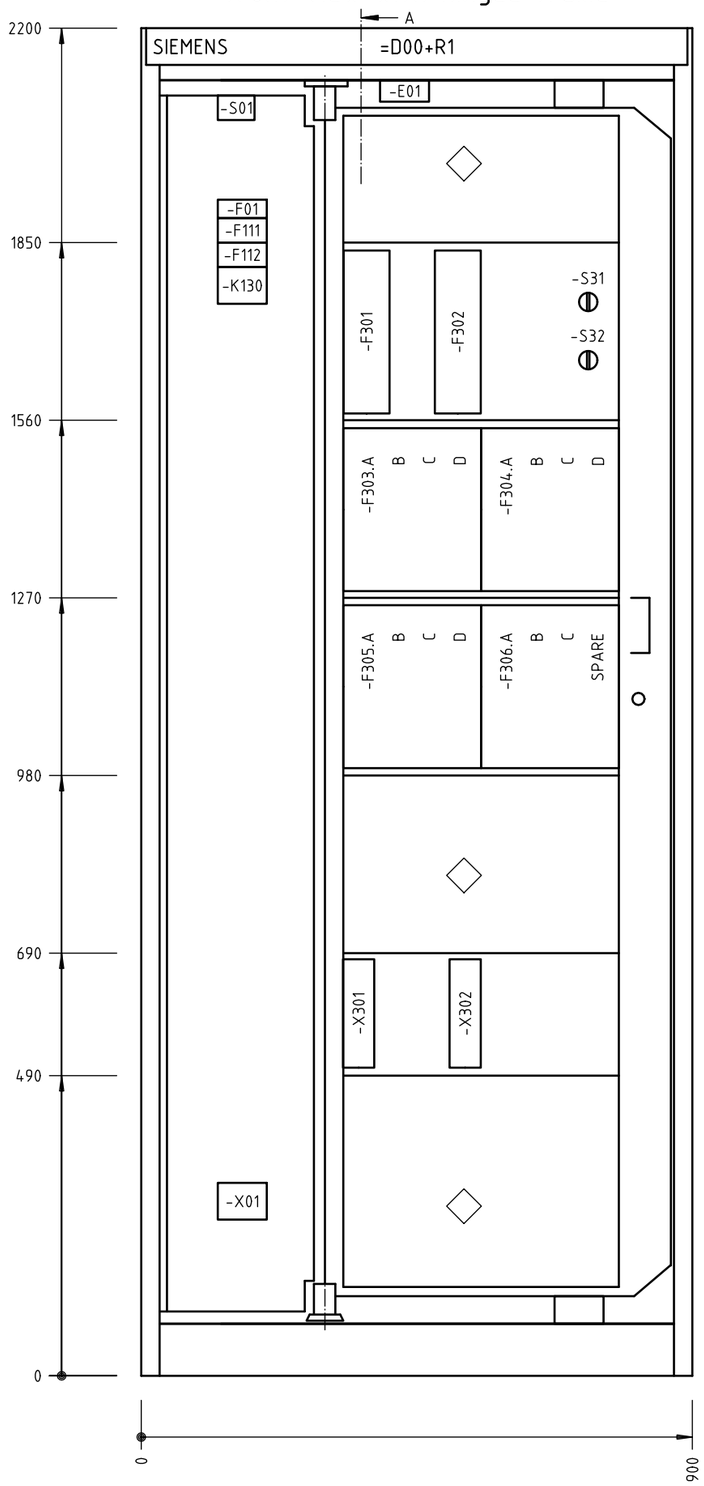

Вид спереди без двери, без вращающейся рамы
front view without doors and swing frames

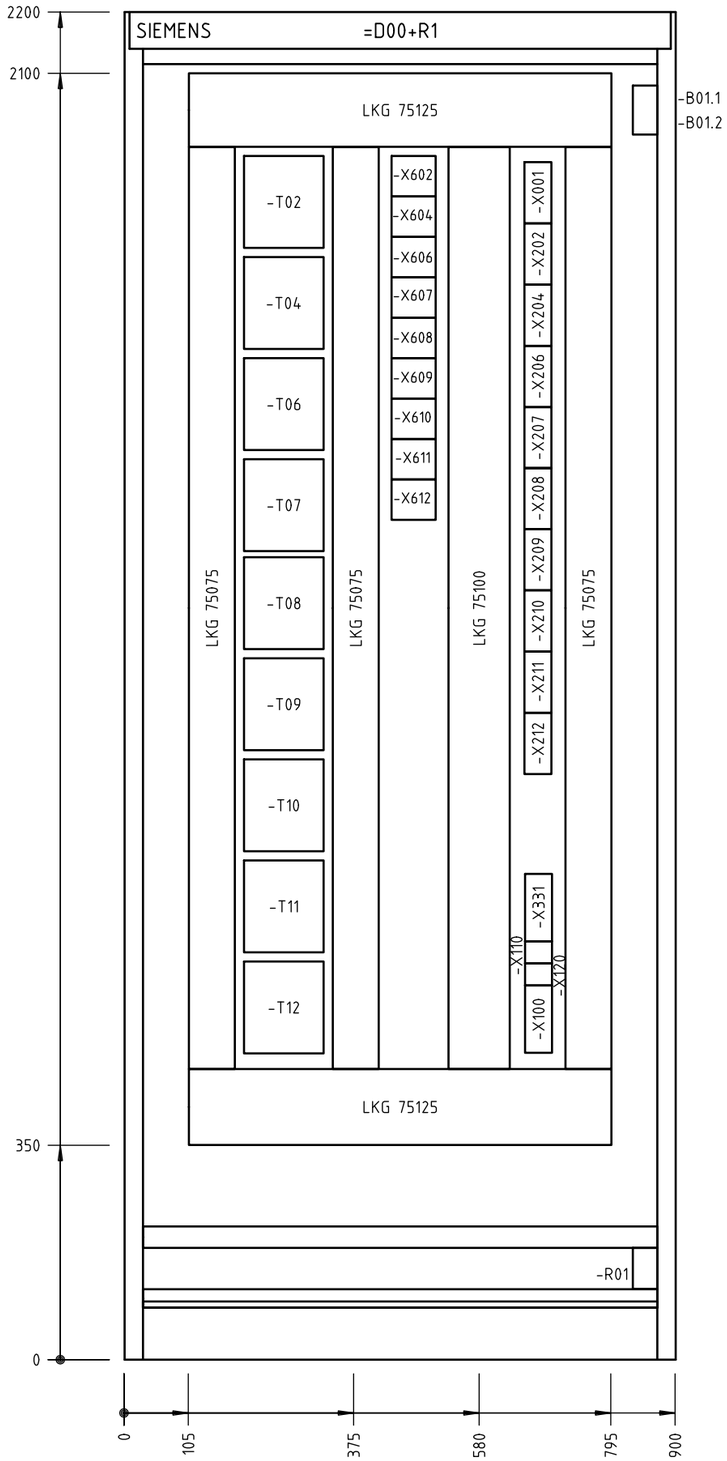

CopyRight (C) Siemens AG 2005 All Rights Reserved

Project: P:/Anl/GEO/Zestafoni_V0/710/050915_WR_indoor/D00_R1.pro
Symbol library 1: GeorgSym
Symbol library 2: PTD60617
Symbol library 3: H2_60617
Symbol library 4:

Translate file A: a-project.etr
Translate file B: b-Zestafoni_r.etr
Translate file C: C_FB_E.etr
Translate file D: d-Feld_e.etr

ELCAD-Version 7.1.0
Last used: 02.02.2007
Archive: = / U / US / 2

				Date	31.03.05	Power Transmission Rehabilitation Program II	Siemens AG	BB protection	U	=D00	
A	workshop rev.	13.09.05	Fra	Drawn	Witting	GSE Georgian State Electric System		Структурные чертежи		+R1	US2
R1	AS BUILT	12.12.06	GRE	Appr.	Wolf	FICHTNER		arrangement drawings	(3)E50115-A2928-V366-R1		Sheet 2-
Rev.	Remarks	Date	Name	Norm		Orig./Repl.f./Repl.by		Arrangement drawing			2 Sh.

ELCAD-Version 7.1.0
Last used: 02.02.2007
Archive: = / V / VS / 1

Translate file A: a-project.etr
Translate file B: b-Zestafoni_r.etr
Translate file C: C_FB_E.etr
Translate file D: d-Feld_e.etr

Project: P:/Anl/GEO/Zestafoni_V0/710/050915_WR_indoor/D00_R1.pro
Symbol library 1: GeorgSym
Symbol library 2: PTD60617
Symbol library 3: H2_60617
Symbol library 4:

	Cable designation	Type, core no. , cross section	Destination, item designation	Level
1	=D04-W355	NYCY 12x2,5/4		
2				
3				
4				
5				
6				
7				
8				
9				
10				
11				
12				
13				
14				
15				

Cable connection to termination: A [ ] B [/]

Terminal: 1...
Line-up type: UK5N, Fa. Phoenix
Type of wiring: see circuit diagram

1	2	3	4	5	6	7	8	9	10	11	12	13	14	15
6														
7														

	Cable designation	Type, core no. , cross section	Destination, item designation	Level
1	=D12-W001	NYCY 4x6/6	=D12+S1-X100	
2				
3				
4				
5				
6				
7				
8				
9				
10				
11				
12				
13				
14				
15				

Terminal	Line-up type	Type of wiring
1...	UK5N, Fa. Phoenix	see circuit diagram
PE1,PE2	USLKG10N, Fa. Phoenix	

Cable connection to termination: A [ ] B [/]

1	2	3	4	5	6	7	8	9	10	11	12	13	14	15
BK														
BN														
GY														
BU														
SC														

	Cable designation	Type, core no. , cross section	Destination, item designation	Level
1	=D12-W111	NYCY 4x6/6	=D12+S1-X100	
2				
3				
4				
5				
6				
7				
8				
9				
10				
11				
12				
13				
14				
15				

Cable connection to termination
A
B

Terminal	Line-up type	Type of wiring
1...	UK5N, Fa. Phoenix	see circuit diagram

1	2	3	4	5	6	7	8	9	10	11	12	13	14	15
BK														
BN														
B														
2														

Termination A Destination Item designation				Terminal strip Link	Term.-No	Cross-Ref.		Termination B Destination Item designation		
				-X110						
=D12	+S1	-X110	:2A		1	/G1.3	1L+	-F111	:3	
					2	/G1.5				
=D12	+S1	-X110	:4A	X	3	/G1.3	1L-	-F111	:1	
				XX	4	/G1.5				

Screen bus	A Cable clip		Cover
N-bus	B Screen bus		Insulation plate
PE-PEN-bus	C Cable gland		Higher level insulation plate
Used cores total	D Plug housing		Test socket
Continued on sheet	E Insulated		Slide bridge

ELCAD-Version 7.1.0
Last used: 02.02.2007
Archive: = / V / VS / 3
Translate file A: a-project.etr
Translate file B: b-Zestafoni_r.etr
Translate file C: C_FB_E.etr
Translate file D: d-Feld_e.etr
Project: P:/Anl/GEO/Zestafoni_V0/710/050915_WR_indoor/D00_R1.pro
Symbol library 1: GeorgSym
Symbol library 2: PTD60617
Symbol library 3: H2_60617
Symbol library 4:

CopyRight (C) Siemens AG 2005 All Rights Reserved

				Date	31.03.05	Power Transmission Rehabilitation Program II	Siemens AG	BB protection	V	=D00	
A	workshop rev.	13.09.05	Fra	Drawn	Witting	GSE Georgian State Electric System		=D00+R1-X110		+R1	VS3
R1	AS BUILT	12.12.06	GRE	Appr.	Wolf	FICHTNER				(3)E50115-A2928-S371-R1	Sheet 3+
Rev.	Remarks	Date	Name	Norm		Orig./Repl.f./Repl.by		Connection table			23 Sh.

	Cable designation	Type, core no. , cross section	Destination, item designation	Level
1	=D12-W121	NYCY 4x6/6	=D12+S1-X100	
2				
3				
4				
5				
6				
7				
8				
9				
10				
11				
12				
13				
14				
15				

Terminal	Line-up type	Type of wiring
1...	UK5N, Fa. Phoenix	see circuit diagram

Cable connection to termination: A [ ] B [/]

1	2	3	4	5	6	7	8	9	10	11	12	13	14	15
BK														
BN														
B														
2														

Termination A Destination Item designation					Terminal strip Link	Term.-No	Cross-Ref.		Termination B Destination Item designation		
					-X120						
=D12	+S1	-X120	:2A			1	/G1.4	2L+	-F112	:3
						2	/G1.5			
=D12	+S1	-X120	:4A	X		3	/G1.4	2L-	-F112	:1
				XX		4	/G1.5			

Screen bus	A Cable clip
N-bus	B Screen bus
PE-PEN-bus	C Cable gland
Used cores total	D Plug housing
Continued on sheet	E Insulated

Cover
Insulation plate
Higher level insulation plate
Test socket
Slide bridge

ELCAD-Version 7.1.0
Last used: 02.02.2007
Archive: = / V / VS / 4
Translate file A: a-project.etr
Translate file B: b-Zestafoni_r.etr
Translate file C: C_FB_E.etr
Translate file D: d-Feld_e.etr
Project: P:/Anl/GEO/Zestafoni_V0/710/050915_WR_indoor/D00_R1.pro
Symbol library 1: GeorgSym
Symbol library 2: PTD60617
Symbol library 3: H2_60617
Symbol library 4:

CopyRight (C) Siemens AG 2005 All Rights Reserved

				Date	31.03.05	Power Transmission Rehabilitation Program II	Siemens AG	BB protection	V	=D00
A	workshop rev.	13.09.05	Fra	Drawn	Witting	GSE Georgian State Electric System		=D00+R1-X120		+R1
R1	AS BUILT	12.12.06	GRE	Appr.	Wolf	FICHTNER				VS4
Rev.	Remarks	Date	Name	Norm		Orig./Repl.f./Repl.by		Connection table	(3)E50115-A2928-S371-R1	Sheet 4+ 23 Sh.

ELCAD-Version 7.1.0
Last used: 02.02.2007
Archive: = / V / VS / 5

Translate file A: a-project.etr
Translate file B: b-Zestafoni_r.etr
Translate file C: C_FB_E.etr
Translate file D: d-Feld_e.etr

Project: P:/Anl/GEO/Zestafoni_V0/710/050915_WR_indoor/D00_R1.pro
Symbol library 1: GeorgSym
Symbol library 2: PTD60617
Symbol library 3: H2_60617
Symbol library 4:

CopyRight (C) Siemens AG 2005 All Rights Reserved

	Cable designation	Type, core no. , cross section	Destination, item designation	Level
1	=D02-W355	NYCY 12x2,5/4		
2				
3				
4				
5				
6				
7				
8				
9				
10				
11				
12				
13				
14				
15				

Cable connection to termination: A [ ] B [/]

Terminal: 1...
Line-up type: UK5N, Fa. Phoenix
Type of wiring: see circuit diagram

	1	2	3	4	5	6	7	8	9	10	11	12	13	14	15
3															
4															
5															
2															
1															
12															

ELCAD-Version 7.1.0
Last used: 02.02.2007
Archive: = / V / VS / 6

Translate file A: a-project.etr
Translate file B: b-Zestafoni_r.etr
Translate file C: C_FB_E.etr
Translate file D: d-Feld_e.etr

Project: P:/Anl/GEO/Zestafoni_VO/710/050915_WR_indoor/D00_R1.pro
Symbol library 1: GeorgSym
Symbol library 2: PTD60617
Symbol library 3: H2_60617
Symbol library 4:

	Cable designation	Type, core no. , cross section	Destination, item designation	Level
1	=D04-W355	NYCY 12x2,5/4		
2				
3				
4				
5				
6				
7				
8				
9				
10				
11				
12				
13				
14				
15				

Terminal: 1...
Line-up type: UK5N, Fa. Phoenix
Type of wiring: see circuit diagram

Cable connection to termination: A [ ] B [/]

1	2	3	4	5	6	7	8	9	10	11	12	13	14	15
3														
4														
5														
2														
1														
12														

ELCAD-Version 7.1.0
Last used: 02.02.2007
Archive: = / V / VS / 7

Project: P:/Anl/GEO/Zestafoni_VO/710/050915_WR_indoor/D00_R1.pro
Symbol library 1: GeorgSym
Symbol library 2: PTD60617
Symbol library 3: H2_60617
Symbol library 4:

Translate file A: a-project.etr
Translate file B: b-Zestafoni_r.etr
Translate file C: C_FB_E.etr
Translate file D: d-Feld_e.etr

	Cable designation	Type, core no. , cross section	Destination, item designation	Level
1	=D06-W355	NYCY 12x2,5/4		
2				
3				
4				
5				
6				
7				
8				
9				
10				
11				
12				
13				
14				
15				

Terminal: 1...
Line-up type: UK5N, Fa. Phoenix
Type of wiring: see circuit diagram

Cable connection to termination: A [ ] B [/]

1	2	3	4	5	6	7	8	9	10	11	12	13	14	15
3														
4														
5														
6														
2														
7														
11														
9														
1														
8														
10														
12														

Termination A Destination Item designation				Terminal strip Link	Term.-No	Cross-Ref.	Termination B Destination Item designation	
				-X206				
=D06	+SR1	-X355	:1A	○	1	/NC13.6	-X331	:9 B
=D06	+SR1	-X355	:7A	○	2	/NC13.6	-F305.B	:-X2 1
=D06	+SR1	-X355	:10A	○	3	/NC13.6	-F305.B	:-X1 19
=D06	+SR1	-X312	:45A	○	5	/NC14.5	-F305.C	:-X1 4
=D06	+SR1	-X312	:51A	○	6	/NC14.5	-F305.C	:-X1 1
				○	7	/NC14.6	-F305.C	:-X1 10
=D06	+SR1	-X312	:57A	○	8	/NC14.6	-F305.C	:-X1 7
=D06	+SR1	-X332	:42A	○	9	/NC14.8	-F306.C	:X1:4
=D06	+SR1	-X331	:42A	○	10	/NC14.8	-F306.C	:X1:2
=D06	+SR1	-X312	:3A	●	11	/NC14.5	-F305.C	:-X1 2
				●	12	/NC14.5	-F305.C	:-X1 5
				●	13	/NC14.6	-F305.C	:-X1 8
				○	14	/NC14.6	-F305.C	:-X1 11
=D06	+SR1	-X331	:4A	○	15	/NC14.7	-F306.C	:X1:1
=D06	+SR1	-X332	:4A	○	16	/NC14.8	-F306.C	:X1:5
=D06	+SR1	-X355	:59	●	17	/NC13.7		
		-F305.B	:-X1 10	●	18	/NC14.4	-F305.C	:22

Screen bus	A Cable clip	Cover	
N-bus	B Screen bus	Insulation plate	
PE-PEN-bus	C Cable gland	Higher level insulation plate	
Used cores total	D Plug housing	Test socket	
Continued on sheet	E Insulated	Slide bridge	

CopyRight (C) Siemens AG 2005 All Rights Reserved

Rev.	Remarks	Date	Name			
				Date	31.03.05	
A	workshop rev.	13.09.05	Fra	Drawn	Witting	
R1	AS BUILT	12.12.06	GRE	Appr.	Wolf	
				Norm		

Power Transmission Rehabilitation Program II
GSE Georgian State Electric System
FICHTNER
Orig./Repl.f./Repl.by

Siemens AG

BB protection
=D00+R1-X206
Connection table

V =D00
+R1
VS7
(3)E50115-A2928-S371-R1
Sheet 7+
23 Sh.

ELCAD-Version 7.1.0
Last used: 02.02.2007
Archive: = / V / VS / 8

Project: P:/Anl/GEO/Zestafoni_VO/710/050915_WR_indoor/D00_R1.pro
Symbol library 1: GeorgSym
Symbol library 2: PTD60617
Symbol library 3: H2_60617
Symbol library 4:

Translate file A: a-project.etr
Translate file B: b-Zestafoni_r.etr
Translate file C: C_FB_E.etr
Translate file D: d-Feld_e.etr

CopyRight (C) Siemens AG 2005 All Rights Reserved

	Cable designation	Type, core no. , cross section	Destination, item designation	Level
1	=D07-W355	NYCY 12x2,5/4		
2				
3				
4				
5				
6				
7				
8				
9				
10				
11				
12				
13				
14				
15				

Cable connection to termination: A [ ] B [/]

Terminal: 1...
Line-up type: UK5N, Fa. Phoenix
Type of wiring: see circuit diagram

1	2	3	4	5	6	7	8	9	10	11	12	13	14	15
3														
4														
5														
6														
2														
7														
11														
9														
1														
8														
10														
12														

Termination A Destination Item designation				Terminal strip Link						Term.-No	Cross-Ref.	Termination B Destination Item designation	
				-X207									
=D07	+SR1	-X355	:1A	○						1	/NC11.6	-X331	:8 B
=D07	+SR1	-X355	:7A	○						2	/NC11.6	-F305.A	:-X2 1
=D07	+SR1	-X355	:10A	○						3	/NC11.6	-F305.A	:-X1 19
=D07	+SR1	-X312	:45A	○						5	/NC12.5	-F304.D	:-X1 16
=D07	+SR1	-X312	:51A	○						6	/NC12.5	-F304.D	:-X1 13
				○						7	/NC12.6	-F304.D	:-X1 39
=D07	+SR1	-X312	:57A	○						8	/NC12.6	-F304.D	:-X1 19
=D07	+SR1	-X332	:42A	○						9	/NC12.8	-F304.D	:-X2 19
=D07	+SR1	-X331	:42A	○						10	/NC12.8	-F304.D	:-X2 16
=D07	+SR1	-X312	:3A	●						11	/NC12.5	-F304.D	:-X1 14
				●						12	/NC12.5	-F304.D	:-X1 17
				●						13	/NC12.6	-F304.D	:-X1 20
				○						14	/NC12.6	-F304.D	:-X1 40
=D07	+SR1	-X331	:4A	○						15	/NC12.7	-F304.D	:-X2 17
=D07	+SR1	-X332	:4A	○						16	/NC12.7	-F304.D	:-X2 20
=D07	+SR1	-X355	:59	●						17	/NC11.7		
		-F305.A	:-X1 10	●						18	/NC12.4	-F304.D	:34

Screen bus	A Cable clip	Cover
N-bus	B Screen bus	Insulation plate
PE-PEN-bus	C Cable gland	Higher level insulation plate
Used cores total	D Plug housing	Test socket
Continued on sheet	E Insulated	Slide bridge

Rev.	Remarks	Date	Name			
				Date	31.03.05	
A	workshop rev.	13.09.05	Fra	Drawn	Witting	
R1	AS BUILT	12.12.06	GRE	Appr.	Wolf	
				Norm		

Power Transmission Rehabilitation Program II
GSE Georgian State Electric System
FICHTNER
Orig./Repl.f./Repl.by

Siemens AG

BB protection
=D00+R1-X207
Connection table

V =D00
+R1
VS8
(3)E50115-A2928-S371-R1
Sheet 8+
23 Sh.

ELCAD-Version 7.1.0
Last used: 02.02.2007
Archive: = / V / VS / 9

Project: P:/Anl/GEO/Zestafoni_VO/710/050915_WR_indoor/D00_R1.pro
Symbol library 1: GeorgSym
Symbol library 2: PTD60617
Symbol library 3: H2_60617
Symbol library 4:

Translate file A: a-project.etr
Translate file B: b-Zestafoni_r.etr
Translate file C: C_FB_E.etr
Translate file D: d-Feld_e.etr

	Cable designation	Type, core no. , cross section	Destination, item designation	Level
1	=D08-W355	NYCY 12x2,5/4		
2				
3				
4				
5				
6				
7				
8				
9				
10				
11				
12				
13				
14				
15				

Cable connection to termination
A
B

Terminal: 1...
Line-up type: UK5N, Fa. Phoenix
Type of wiring: see circuit diagram

1	2	3	4	5	6	7	8	9	10	11	12	13	14	15
3														
4														
5														
6														
2														
7														
11														
9														
1														
8														
10														
12														

Termination A Destination Item designation				Terminal strip Link						Term.-No	Cross-Ref.	Termination B Destination Item designation	
				-X208									
=D08	+S1	-X355	:1A	○						1	/NC9.6	-X331	:7 B
=D08	+S1	-X355	:7A	○						2	/NC9.6	-F304.C	:-X2 1
=D08	+S1	-X355	:10A	○						3	/NC9.6	-F304.C	:-X1 19
=D08	+S1	-X312	:45A	○						5	/NC10.5	-F304.D	:-X1 4
=D08	+S1	-X312	:51A	○						6	/NC10.5	-F304.D	:-X1 1
				○						7	/NC10.6	-F304.D	:-X1 10
=D08	+S1	-X312	:57A	○						8	/NC10.6	-F304.D	:-X1 7
=D08	+S1	-X355	:58A	○						9	/NC10.8	-F306.C	:X2:13
=D08	+S1	-X355	:54A	○						10	/NC10.8	-F306.C	:X2:10
=D08	+S1	-X312	:3A	●						11	/NC10.5	-F304.D	:-X1 2
				●						12	/NC10.5	-F304.D	:-X1 5
				●						13	/NC10.6	-F304.D	:-X1 8
				○						14	/NC10.6	-F304.D	:-X1 11
=D08	+S1	-X355	:52A	○						15	/NC10.7	-F306.C	:X2:11
=D08	+S1	-X355	:56A	○						16	/NC10.8	-F306.C	:X2:14
=D08	+S1	-X355	:59	●						17	/NC9.7		
		-F304.C	:-X1 10	●						18	/NC10.4	-F304.D	:22

Screen bus	A Cable clip		Cover
N-bus	B Screen bus		Insulation plate
PE-PEN-bus	C Cable gland		Higher level insulation plate
Used cores total	D Plug housing		Test socket
Continued on sheet	E Insulated		Slide bridge

CopyRight (C) Siemens AG 2005 All Rights Reserved

Rev.	Remarks	Date	Name			
				Date	31.03.05	
A	workshop rev.	13.09.05	Fra	Drawn	Witting	
R1	AS BUILT	12.12.06	GRE	Appr.	Wolf	
				Norm		

Power Transmission Rehabilitation Program II
GSE Georgian State Electric System
FICHTNER
Orig./Repl.f./Repl.by

Siemens AG

BB protection
=D00+R1-X208
Connection table

V =D00
+R1
VS9
(3)E50115-A2928-S371-R1
Sheet 9+
23 Sh.

ELCAD-Version 7.1.0
Last used: 02.02.2007
Archive: = / V / VS / 10

Translate file A: a-project.etr
Translate file B: b-Zestafoni_r.etr
Translate file C: C_FB_E.etr
Translate file D: d-Feld_e.etr

Project: P:/Anl/GEO/Zestafoni_V0/710/050915_WR_indoor/D00_R1.pro
Symbol library 1: GeorgSym
Symbol library 2: PTD60617
Symbol library 3: H2_60617
Symbol library 4:

CopyRight (C) Siemens AG 2005 All Rights Reserved

	Cable designation	Type, core no. , cross section	Destination, item designation	Level
1	=D09-W355	NYCY 12x2,5/4		
2				
3				
4				
5				
6				
7				
8				
9				
10				
11				
12				
13				
14				
15				

Terminal: 1...
Line-up type: UK5N, Fa. Phoenix
Type of wiring: see circuit diagram

Cable connection to termination: A [ ] B [/]

1	2	3	4	5	6	7	8	9	10	11	12	13	14	15
3														
4														
5														
2														
1														
12														

ELCAD-Version 7.1.0
Last used: 02.02.2007
Archive: = / V / VS / 11

Project: P:/Anl/GEO/Zestafoni_VO/710/050915_WR_indoor/D00_R1.pro
Symbol library 1: GeorgSym
Symbol library 2: PTD60617
Symbol library 3: H2_60617
Symbol library 4:

Translate file A: a-project.etr
Translate file B: b-Zestafoni_r.etr
Translate file C: C_FB_E.etr
Translate file D: d-Feld_e.etr

	Cable designation	Type, core no. , cross section	Destination, item designation	Level
1	=D10-W355	NYCY 12x2,5/4		
2				
3				
4				
5				
6				
7				
8				
9				
10				
11				
12				
13				
14				
15				

Terminal: 1...
Line-up type: UK5N, Fa. Phoenix
Type of wiring: see circuit diagram

Cable connection to termination: A [ ] B [/]

1	2	3	4	5	6	7	8	9	10	11	12	13	14	15

	Termination A Destination Item designation				Terminal strip -X210 Link						Term.-No	Cross-Ref.	Termination B Destination Item designation	
3	=D10	+SR1	-X355	:1A	○						1	/NC5.6	-X331	:5 B
4	=D10	+SR1	-X355	:7A	○						2	/NC5.6	-F303.D	:-X2 1
5	=D10	+SR1	-X355	:10A	○						3	/NC5.6	-F303.D	:-X1 19
6	=D10	+S1	-X312	:45A	○						5	/NC6.5	-F304.A	:-X1 4
2	=D10	+S1	-X312	:51A	○						6	/NC6.5	-F304.A	:-X1 1
					○						7	/NC6.6	-F304.A	:-X1 10
7	=D10	+S1	-X312	:57A	○						8	/NC6.6	-F304.A	:-X1 7
11	=D10	+S1	-X332	:42A	○						9	/NC6.8	-F306.C	:X2:7
9	=D10	+S1	-X331	:42A	○						10	/NC6.8	-F306.C	:X2:4
1	=D10	+S1	-X312	:3A	●						11	/NC6.5	-F304.A	:-X1 2
					●						12	/NC6.5	-F304.A	:-X1 5
					●						13	/NC6.6	-F304.A	:-X1 8
					○						14	/NC6.6	-F304.A	:-X1 11
8	=D10	+S1	-X331	:4A	○						15	/NC6.7	-F306.C	:X2:5
10	=D10	+S1	-X332	:4A	○						16	/NC6.8	-F306.C	:X2:8
12	=D10	+SR1	-X355	:59	●						17	/NC5.7		
			-F303.D	:-X1 10	●						18	/NC6.4	-F304.A	:22

XX

Screen bus	A Cable clip		Cover
N-bus	B Screen bus		Insulation plate
PE-PEN-bus	C Cable gland		Higher level insulation plate
Used cores total	D Plug housing		Test socket
Continued on sheet	E Insulated		Slide bridge

CopyRight (C) Siemens AG 2005 All Rights Reserved

Rev.	Remarks	Date	Name			
				Date	31.03.05	
A	workshop rev.	13.09.05	Fra	Drawn	Witting	
R1	AS BUILT	12.12.06	GRE	Appr.	Wolf	
				Norm		

Power Transmission Rehabilitation Program II
GSE Georgian State Electric System
FICHTNER
Orig./Repl.f./Repl.by

Siemens AG

BB protection
=D00+R1-X210
Connection table

V =D00
+R1
VS11
(3)E50115-A2928-S371-R1
Sheet 11+
23 Sh.

ELCAD-Version 7.1.0
Last used: 02.02.2007
Archive: = / V / VS / 12

Translate file A: a-project.etr
Translate file B: b-Zestafoni_r.etr
Translate file C: C_FB_E.etr
Translate file D: d-Feld_e.etr

Project: P:/Anl/GEO/Zestafoni_V0/710/050915_WR_indoor/D00_R1.pro
Symbol library 1: GeorgSym
Symbol library 2: PTD60617
Symbol library 3: H2_60617
Symbol library 4:

	Cable designation	Type, core no. , cross section	Destination, item designation	Level
1	=D11-W355	NYCY 12x2,5/4		
2				
3				
4				
5				
6				
7				
8				
9				
10				
11				
12				
13				
14				
15				

Terminal: 1...
Line-up type: UK5N, Fa. Phoenix
Type of wiring: see circuit diagram

Cable connection to termination: A [ ] B [/]

1	2	3	4	5	6	7	8	9	10	11	12	13	14	15

Termination A Destination Item designation				Terminal strip Link	Term.-No	Cross-Ref.	Termination B Destination Item designation	
				-X211				
=D11	+SR1	-X355	:1A	○	1	/NC3.6	-X331	:4 B
=D11	+SR1	-X355	:7A	○	2	/NC3.6	-F303.C	:-X2 1
=D11	+SR1	-X355	:10A	○	3	/NC3.6	-F303.C	:-X1 19
=D11	+SR1	-X312	:44A	○	5	/NC4.5	-F303.B	:-X1 16
=D11	+SR1	-X312	:49A	○	6	/NC4.5	-F303.B	:-X1 13
				○	7	/NC4.6	-F303.B	:-X1 39
=D11	+SR1	-X312	:54A	○	8	/NC4.6	-F303.B	:-X1 19
				○	9	/NC4.7	-F303.B	:-X2 19
=D11	+SR1	-X331	:42A	○	10	/NC4.8	-F303.B	:-X2 16
=D11	+SR1	-X312	:3A	●	11	/NC4.5	-F303.B	:-X1 14
				●	12	/NC4.5	-F303.B	:-X1 17
				●	13	/NC4.6	-F303.B	:-X1 20
				○	14	/NC4.6	-F303.B	:-X1 40
=D11	+SR1	-X331	:4A	○	15	/NC4.7	-F303.B	:-X2 17
				○	16	/NC4.7	-F303.B	:-X2 20
=D11	+SR1	-X	:59	●	17	/NC3.7		
		-F303.C	:-X1 10	●	18	/NC4.4	-F303.B	:34

Screen bus	A Cable clip	Cover	
N-bus	B Screen bus	Insulation plate	
PE-PEN-bus	C Cable gland	Higher level insulation plate	
Used cores total	D Plug housing	Test socket	
Continued on sheet	E Insulated	Slide bridge	

CopyRight (C) Siemens AG 2005 All Rights Reserved

Rev.	Remarks	Date	Name		
				Date	31.03.05
A	workshop rev.	13.09.05	Fra	Drawn	Witting
R1	AS BUILT	12.12.06	GRE	Appr.	Wolf
				Norm	

Power Transmission Rehabilitation Program II
GSE Georgian State Electric System
FICHTNER
Orig./Repl.f./Repl.by

Siemens AG

BB protection
=D00+R1-X211
Connection table

V =D00
+R1
VS12
(3)E50115-A2928-S371-R1
Sheet 12+
23 Sh.

ELCAD-Version 7.1.0
Last used: 02.02.2007
Archive: = / V / VS / 13

Project: P:/Anl/GEO/Zestafoni_V0/710/050915_WR_indoor/D00_R1.pro
Symbol library 1: GeorgSym
Symbol library 2: PTD60617
Symbol library 3: H2_60617
Symbol library 4:

Translate file A: a-project.etr
Translate file B: b-Zestafoni_r.etr
Translate file C: C_FB_E.etr
Translate file D: d-Feld_e.etr

CopyRight (C) Siemens AG 2005 All Rights Reserved

	Cable designation	Type, core no. , cross section	Destination, item designation	Level
1	=D12-W355	NYCY 12x2,5/4		
2				
3				
4				
5				
6				
7				
8				
9				
10				
11				
12				
13				
14				
15				

Cable connection to termination: A [ ] B [/]

Terminal: 1...
Line-up type: UK5N, Fa. Phoenix
Type of wiring: see circuit diagram

	1	2	3	4	5	6	7	8	9	10	11	12	13	14	15
3															
4															
5															
2															
1															
12															

ELCAD-Version 7.1.0
Last used: 02.02.2007
Archive: = / V / VS / 14

Translate file A: a-project.etr
Translate file B: b-Zestafoni_r.etr
Translate file C: C_FB_E.etr
Translate file D: d-Feld_e.etr

Project: P:/Anl/GEO/Zestafoni_VO/710/050915_WR_indoor/D00_R1.pro
Symbol library 1: GeorgSym
Symbol library 2: PTD60617
Symbol library 3: H2_60617
Symbol library 4:

	Cable designation	Type, core no. , cross section	Destination, item designation	Level
1				
2				
3				
4				
5				
6				
7				
8				
9				
10				
11				
12				
13				
14				
15				

1	2	3	4	5	6	7	8	9	10	11	12	13	14	15

Cable connection to termination
A
B

Terminal
1...

Line-up type
UK5N, Fa. Phoenix

Type of wiring
see circuit diagram

Termination A Destination Item designation		Terminal strip Link	Term.-No	Cross-Ref.		Termination B Destination Item designation	
		-X331					
			1	/G1.3	31L+	-K130	:14
			2	/NC1.6		-X212	:1 B
			3	/NC2.3		-F303.A	:-X2 16
			4	/NC3.6		-X211	:1 B
			5	/NC5.6		-X210	:1 B
			6	/NC7.6		-X209	:1 B
			7	/NC9.6		-X208	:1 B
			8	/NC11.6		-X207	:1 B
			9	/NC13.6		-X206	:1 B
			10	/NC15.6		-X204	:1 B
			11	/NC17.6		-X202	:1 B
	X		21	/G1.3	31L-	-K130	:44
	XX		22	/NC1.2		-F303.A	:-X2 2

Screen bus	A Cable clip	Cover	
N-bus	B Screen bus	Insulation plate	
PE-PEN-bus	C Cable gland	Higher level insulation plate	
Used cores total	D Plug housing	Test socket	
Continued on sheet	E Insulated	Slide bridge	

CopyRight (C) Siemens AG 2005 All Rights Reserved

Rev.	Remarks	Date	Name			
A	workshop rev.	13.09.05	Fra	Date	31.03.05	
R1	AS BUILT	12.12.06	GRE	Drawn	Witting	
				Appr.	Wolf	
				Norm		

Power Transmission Rehabilitation Program II
GSE Georgian State Electric System
FICHTNER
Orig./Repl.f./Repl.by

Siemens AG

BB protection
=D00+R1-X331

Connection table

V =D00
+R1
VS14
Sheet 14+
23 Sh.

(3)E50115-A2928-S371-R1

	Cable designation	Type, core no. , cross section	Destination, item designation	Level
1	=D02-W603	NYCY 4x4/4	=W01+W1-X	
2				
3				
4				
5				
6				
7				
8				
9				
10				
11				
12				
13				
14				
15				

Cable connection to termination: A [ ] B [/]

Terminal	Line-up type	Type of wiring
1...	URTKS, Fa. Phoenix	see circuit diagram

	1	2	3	4	5	6	7	8	9	10	11	12	13	14	15
BK															
BN															
GY															
BU															
B															
4															

Termination A Destination Item designation				Terminal strip Link	Term.-No	Cross-Ref.	Termination B Destination Item designation	
=D02	+S2	-X603	:12A	-X602	1	/NC17.2	-T02	:I
=D02	+S2	-X603	:22A		2	/NC17.2		
=D02	+S2	-X603	:32A		3	/NC17.3	-T02	:A
=D02	+S2	-X603	:42A		4	/NC17.3	-T02	:O
					5	/NC17.3	-T02	:M
					6	/NC17.3		
					7	/NC17.3	-T02	:H
				XX	8	/NC17.3	-T02	:N

Screen bus	A Cable clip
N-bus	B Screen bus
PE-PEN-bus	C Cable gland
Used cores total	D Plug housing
Continued on sheet	E Insulated

Cover
Insulation plate
Higher level insulation plate
Test socket
Slide bridge

ELCAD-Version 7.1.0
Last used: 02.02.2007
Archive: = / V / VS / 15
Translate file A: a-project.etr
Translate file B: b-Zestafoni_r.etr
Translate file C: C_FB_E.etr
Translate file D: d-Feld_e.etr
Project: P:/Anl/GEO/Zestafoni_V0/710/050915_WR_indoor/D00_R1.pro
Symbol library 1: GeorgSym
Symbol library 2: PTD60617
Symbol library 3: H2_60617
Symbol library 4:

CopyRight (C) Siemens AG 2005 All Rights Reserved

				Date	31.03.05	Power Transmission Rehabilitation Program II	Siemens AG	BB protection	V	=D00
A	workshop rev.	13.09.05	Fra	Drawn	Witting	GSE Georgian State Electric System		=D00+R1-X602		+R1
R1	AS BUILT	12.12.06	GRE	Appr.	Wolf	FICHTNER				
Rev.	Remarks	Date	Name	Norm		Orig./Repl.f./Repl.by		Connection table	(3)E50115-A2928-S371-R1	

VS15
Sheet 15+
23 Sh.

	Cable designation	Type, core no. , cross section	Destination, item designation	Level
1	=D04-W603	NYCY 4x4/4	=W01+W1-X	
2				
3				
4				
5				
6				
7				
8				
9				
10				
11				
12				
13				
14				
15				

Cable connection to termination: A [ ] B [/]

Terminal	Line-up type	Type of wiring
1...	URTKS, Fa. Phoenix	see circuit diagram

	1	2	3	4	5	6	7	8	9	10	11	12	13	14	15
1	BK														
2	BN														
3	GY														
4	BU														
B															
4															

Termination A Destination Item designation	Terminal strip Link	Term.-No	Cross-Ref.	Termination B Destination Item designation
=D04 +S2 -X603 :12A	-X604	1	/NC15.2	-T04 :I
=D04 +S2 -X603 :22A		2	/NC15.2	
=D04 +S2 -X603 :32A		3	/NC15.3	-T04 :A
=D04 +S2 -X603 :42A		4	/NC15.3	-T04 :O
		5	/NC15.3	-T04 :M
		6	/NC15.3	
		7	/NC15.3	-T04 :H
	XX	8	/NC15.3	-T04 :N

Screen bus	A Cable clip — Cover
N-bus	B Screen bus — Insulation plate
PE-PEN-bus	C Cable gland — Higher level insulation plate
Used cores total	D Plug housing — Test socket
Continued on sheet	E Insulated — Slide bridge

ELCAD-Version 7.1.0
Last used: 02.02.2007
Archive: = / V / VS / 16
Translate file A: a-project.etr
Translate file B: b-Zestafoni_r.etr
Translate file C: C_FB_E.etr
Translate file D: d-Feld_e.etr
Project: P:/Anl/GEO/Zestafoni_V0/710/050915_WR_indoor/D00_R1.pro
Symbol library 1: GeorgSym
Symbol library 2: PTD60617
Symbol library 3: H2_60617
Symbol library 4:

CopyRight (C) Siemens AG 2005 All Rights Reserved

				Date	31.03.05	Power Transmission Rehabilitation Program II	Siemens AG	BB protection	V =D00
A	workshop rev.	13.09.05	Fra	Drawn	Witting	GSE Georgian State Electric System		=D00+R1-X604	+R1 VS16
R1	AS BUILT	12.12.06	GRE	Appr.	Wolf	FICHTNER			(3)E50115-A2928-S371-R1 Sheet 16+
Rev.	Remarks	Date	Name	Norm		Orig./Repl.f./Repl.by		Connection table	23 Sh.

ELCAD-Version 7.1.0
Last used: 02.02.2007
Archive: = / V / VS / 17

Project: P:/Anl/GEO/Zestafoni_V0/710/050915_WR_indoor/D00_R1.pro
Symbol library 1: GeorgSym
Symbol library 2: PTD60617
Symbol library 3: H2_60617
Symbol library 4:

Translate file A: a-project.etr
Translate file B: b-Zestafoni_r.etr
Translate file C: C_FB_E.etr
Translate file D: d-Feld_e.etr

CopyRight (C) Siemens AG 2005 All Rights Reserved

	Cable designation	Type, core no. , cross section	Destination, item designation	Level
1	=D06-W603	NYCY 4x4/4	=W01+W1-X	
2				
3				
4				
5				
6				
7				
8				
9				
10				
11				
12				
13				
14				
15				

Cable connection to termination: A [ ] B [/]

Terminal: 1...
Line-up type: URTKS, Fa. Phoenix
Type of wiring: see circuit diagram

1	2	3	4	5	6	7	8	9	10	11	12	13	14	15
BK														
BN														
GY														
BU														
B														
4														

Termination A Destination Item designation	Terminal strip Link	Term.-No	Cross-Ref.	Termination B Destination Item designation
	-X606			
=D06 +S2 -X603 :12A		1	/NC13.2	-T06 :I
=D06 +S2 -X603 :22A		2	/NC13.2	
=D06 +S2 -X603 :32A		3	/NC13.3	-T06 :A
=D06 +S2 -X603 :42A		4	/NC13.3	-T06 :O
		5	/NC13.3	-T06 :M
		6	/NC13.3	
		7	/NC13.3	-T06 :H
	XX	8	/NC13.3	-T06 :N

Screen bus	A Cable clip		Cover
N-bus	B Screen bus		Insulation plate
PE-PEN-bus	C Cable gland		Higher level insulation plate
Used cores total	D Plug housing		Test socket
Continued on sheet	E Insulated		Slide bridge

Rev.	Remarks	Date	Name			
				Date	31.03.05	
A	workshop rev.	13.09.05	Fra	Drawn	Witting	
R1	AS BUILT	12.12.06	GRE	Appr.	Wolf	
				Norm		

Power Transmission Rehabilitation Program II
GSE Georgian State Electric System
FICHTNER
Orig./Repl.f./Repl.by

Siemens AG

BB protection
=D00+R1-X606
Connection table

V =D00
+R1
VS17
(3)E50115-A2928-S371-R1
Sheet 17+ 23 Sh.

	Cable designation	Type, core no. , cross section	Destination, item designation	Level
1	=D07-W603	NYCY 4x4/4	=W01+W1-X	
2				
3				
4				
5				
6				
7				
8				
9				
10				
11				
12				
13				
14				
15				

Cable connection to termination: A ☐ B ☐

Terminal	Line-up type	Type of wiring
1...	URTKS, Fa. Phoenix	see circuit diagram

	1	2	3	4	5	6	7	8	9	10	11	12	13	14	15
BK															
BN															
GY															
BU															
B															
4															

Termination A Destination Item designation	Terminal strip Link	Term.-No	Cross-Ref.	Termination B Destination Item designation
=D07 +S2 -X603 :12A	-X607	1	/NC11.2	-T07 :I
=D07 +S2 -X603 :22A		2	/NC11.2	
=D07 +S2 -X603 :32A		3	/NC11.3	-T07 :A
=D07 +S2 -X603 :42A		4	/NC11.3	-T07 :O
		5	/NC11.3	-T07 :M
		6	/NC11.3	
		7	/NC11.3	-T07 :H
	XX	8	/NC11.3	-T07 :N

Screen bus	A Cable clip	Cover
N-bus	B Screen bus	Insulation plate
PE-PEN-bus	C Cable gland	Higher level insulation plate
Used cores total	D Plug housing	Test socket
Continued on sheet	E Insulated	Slide bridge

ELCAD-Version 7.1.0
Last used: 02.02.2007
Archive: = / V / VS / 18
Project: P:/Anl/GEO/Zestafoni_V0/710/050915_WR_indoor/D00_R1.pro
Translate file A: a-project.etr
Translate file B: b-Zestafoni_r.etr
Translate file C: C_FB_E.etr
Translate file D: d-Feld_e.etr
Symbol library 1: GeorgSym
Symbol library 2: PTD60617
Symbol library 3: H2_60617
Symbol library 4:

CopyRight (C) Siemens AG 2005 All Rights Reserved

Rev.	Remarks	Date	Name			
				Date	31.03.05	
A	workshop rev.	13.09.05	Fra	Drawn	Witting	
R1	AS BUILT	12.12.06	GRE	Appr.	Wolf	
				Norm		

Power Transmission Rehabilitation Program II
GSE Georgian State Electric System
FICHTNER
Orig./Repl.f./Repl.by

Siemens AG

BB protection
=D00+R1-X607
Connection table

V =D00
+R1
VS18
(3)E50115-A2928-S371-R1
Sheet 18+ 23 Sh.

	Cable designation	Type, core no. , cross section	Destination, item designation	Level
1	=D08-W603	NYCY 4x4/4	=W01+W1-X	
2				
3				
4				
5				
6				
7				
8				
9				
10				
11				
12				
13				
14				
15				

Cable connection to termination: A [ ] B [/]

Terminal	Line-up type	Type of wiring
1...	URTKS, Fa. Phoenix	see circuit diagram

1	2	3	4	5	6	7	8	9	10	11	12	13	14	15
BK														
BN														
GY														
BU														
B														
4														

Termination A Destination Item designation				Terminal strip Link	Term.-No	Cross-Ref.	Termination B Destination Item designation	
				-X608				
=D08	+S2	-X603	:12A		1	/NC9.2	-T08	:I
=D08	+S2	-X603	:22A		2	/NC9.2		
=D08	+S2	-X603	:32A		3	/NC9.3	-T08	:A
=D08	+S2	-X603	:42A		4	/NC9.3	-T08	:O
					5	/NC9.3	-T08	:M
					6	/NC9.3		
					7	/NC9.3	-T08	:H
				XX	8	/NC9.3	-T08	:N

Screen bus	A Cable clip	Cover
N-bus	B Screen bus	Insulation plate
PE-PEN-bus	C Cable gland	Higher level insulation plate
Used cores total	D Plug housing	Test socket
Continued on sheet	E Insulated	Slide bridge

ELCAD-Version 7.1.0
Last used: 02.02.2007
Archive: = / V / VS / 19
Translate file A: a-project.etr
Translate file B: b-Zestafoni_r.etr
Translate file C: C_FB_E.etr
Translate file D: d-Feld_e.etr
Project: P:/Anl/GEO/Zestafoni_V0/710/050915_WR_indoor/D00_R1.pro
Symbol library 1: GeorgSym
Symbol library 2: PTD60617
Symbol library 3: H2_60617
Symbol library 4:

CopyRight (C) Siemens AG 2005 All Rights Reserved

				Date	31.03.05	Power Transmission Rehabilitation Program II	Siemens AG	BB protection	V	=D00
A	workshop rev.	13.09.05	Fra	Drawn	Witting	GSE Georgian State Electric System		=D00+R1-X608		+R1
R1	AS BUILT	12.12.06	GRE	Appr.	Wolf	FICHTNER				
Rev.	Remarks	Date	Name	Norm		Orig./Repl.f./Repl.by		Connection table		

VS19
(3)E50115-A2928-S371-R1
Sheet 19+ 23 Sh.

ELCAD-Version 7.1.0
Last used: 02.02.2007
Archive: = / V / VS / 20

Project: P:/Anl/GEO/Zestafoni_V0/710/050915_WR_indoor/D00_R1.pro
Symbol library 1: GeorgSym
Symbol library 2: PTD60617
Symbol library 3: H2_60617
Symbol library 4:

Translate file A: a-project.etr
Translate file B: b-Zestafoni_r.etr
Translate file C: C_FB_E.etr
Translate file D: d-Feld_e.etr

CopyRight (C) Siemens AG 2005 All Rights Reserved

	Cable designation	Type, core no. , cross section	Destination, item designation	Level
1	=D09-W603	NYCY 4x4/4	=W01+W1-X	
2				
3				
4				
5				
6				
7				
8				
9				
10				
11				
12				
13				
14				
15				

Cable connection to termination: A [ ] B [/]

Terminal: 1...
Line-up type: URTKS, Fa. Phoenix
Type of wiring: see circuit diagram

1	2	3	4	5	6	7	8	9	10	11	12	13	14	15
BK														
BN														
GY														
BU														
B														
4														

Termination A Destination Item designation				Terminal strip Link	Term.-No	Cross-Ref.	Termination B Destination Item designation	
				-X609				
=D09	+S2	-X603	:12A		1	/NC7.2	-T09	:I
=D09	+S2	-X603	:22A		2	/NC7.2		
=D09	+S2	-X603	:32A		3	/NC7.3	-T09	:A
=D09	+S2	-X603	:42A		4	/NC7.3	-T09	:O
					5	/NC7.3	-T09	:M
					6	/NC7.3		
					7	/NC7.3	-T09	:H
				XX	8	/NC7.3	-T09	:N

Screen bus	A Cable clip	Cover
N-bus	B Screen bus	Insulation plate
PE-PEN-bus	C Cable gland	Higher level insulation plate
Used cores total	D Plug housing	Test socket
Continued on sheet	E Insulated	Slide bridge

Rev.	Remarks	Date	Name			
				Date	31.03.05	
A	workshop rev.	13.09.05	Fra	Drawn	Witting	
R1	AS BUILT	12.12.06	GRE	Appr.	Wolf	
				Norm		

Power Transmission Rehabilitation Program II
GSE Georgian State Electric System
FICHTNER
Orig./Repl.f./Repl.by

Siemens AG

BB protection
=D00+R1-X609
Connection table

V =D00
+R1
VS20
(3)E50115-A2928-S371-R1
Sheet 20+ 23 Sh.

	Cable designation	Type, core no. , cross section	Destination, item designation	Level
1	=D10-W603	NYCY 4x4/4	=W01+W1-X	
2				
3				
4				
5				
6				
7				
8				
9				
10				
11				
12				
13				
14				
15				

Cable connection to termination: A ☐ B ☐

Terminal	Line-up type	Type of wiring
1...	URTKS, Fa. Phoenix	see circuit diagram

	1	2	3	4	5	6	7	8	9	10	11	12	13	14	15
BK															
BN															
GY															
BU															
B															
4															

Termination A Destination Item designation	Terminal strip Link	Term.-No	Cross-Ref.	Termination B Destination Item designation
=D10 +S2 -X603 :12A	-X610	1	/NC5.2	-T10 :I
=D10 +S2 -X603 :22A		2	/NC5.2	
=D10 +S2 -X603 :32A		3	/NC5.3	-T10 :A
=D10 +S2 -X603 :42A		4	/NC5.3	-T10 :O
		5	/NC5.3	-T10 :M
		6	/NC5.3	
		7	/NC5.3	-T10 :H
	XX	8	/NC5.3	-T10 :N

Screen bus	A Cable clip	Cover
N-bus	B Screen bus	Insulation plate
PE-PEN-bus	C Cable gland	Higher level insulation plate
Used cores total	D Plug housing	Test socket
Continued on sheet	E Insulated	Slide bridge

ELCAD-Version 7.1.0
Last used: 02.02.2007
Archive: = / V / VS / 21
Project: P:/Anl/GEO/Zestafoni_V0/710/050915_WR_indoor/D00_R1.pro
Translate file A: a-project.etr
Translate file B: b-Zestafoni_r.etr
Translate file C: C_FB_E.etr
Translate file D: d-Feld_e.etr
Symbol library 1: GeorgSym
Symbol library 2: PTD60617
Symbol library 3: H2_60617
Symbol library 4:

CopyRight (C) Siemens AG 2005 All Rights Reserved

Rev.	Remarks	Date	Name			
				Date	31.03.05	
A	workshop rev.	13.09.05	Fra	Drawn	Witting	
R1	AS BUILT	12.12.06	GRE	Appr.	Wolf	
				Norm		

Power Transmission Rehabilitation Program II
GSE Georgian State Electric System
FICHTNER
Orig./Repl.f./Repl.by

Siemens AG

BB protection
=D00+R1-X610
Connection table

V =D00
+R1
VS21
(3)E50115-A2928-S371-R1
Sheet 21+ 23 Sh.

	Cable designation	Type, core no. , cross section	Destination, item designation	Level
1	=D11-W603	NYCY 4x4/4	=W01+W1-X	
2				
3				
4				
5				
6				
7				
8				
9				
10				
11				
12				
13				
14				
15				

Cable connection to termination: A ☐ B ☐

Terminal	Line-up type	Type of wiring
1...	URTKS, Fa. Phoenix	see circuit diagram

	1	2	3	4	5	6	7	8	9	10	11	12	13	14	15
BK															
BN															
GY															
BU															
B															
4															

Termination A Destination Item designation	Terminal strip Link	Term.-No	Cross-Ref.	Termination B Destination Item designation
=D11 +S2 -X603 :12A	-X611	1	/NC3.2	-T11 :I
=D11 +S2 -X603 :22A		2	/NC3.2	
=D11 +S2 -X603 :32A		3	/NC3.3	-T11 :A
=D11 +S2 -X603 :42A		4	/NC3.3	-T11 :O
		5	/NC3.3	-T11 :M
		6	/NC3.3	
		7	/NC3.3	-T11 :H
	XX	8	/NC3.3	-T11 :N

Screen bus	A Cable clip	Cover
N-bus	B Screen bus	Insulation plate
PE-PEN-bus	C Cable gland	Higher level insulation plate
Used cores total	D Plug housing	Test socket
Continued on sheet	E Insulated	Slide bridge

ELCAD-Version 7.1.0
Last used: 02.02.2007
Archive: = / V / VS / 22
Project: P:/Anl/GEO/Zestafoni_V0/710/050915_WR_indoor/D00_R1.pro
Symbol library 1: GeorgSym
Symbol library 2: PTD60617
Symbol library 3: H2_60617
Symbol library 4:
Translate file A: a-project.etr
Translate file B: b-Zestafoni_r.etr
Translate file C: C_FB_E.etr
Translate file D: d-Feld_e.etr

CopyRight (C) Siemens AG 2005 All Rights Reserved

				Date	31.03.05	Power Transmission Rehabilitation Program II	Siemens AG	BB protection	V =D00
A	workshop rev.	13.09.05	Fra	Drawn	Witting	GSE Georgian State Electric System		=D00+R1-X611	+R1 VS22
R1	AS BUILT	12.12.06	GRE	Appr.	Wolf	FICHTNER			(3)E50115-A2928-S371-R1 Sheet 22+
Rev.	Remarks	Date	Name	Norm		Orig./Repl.f./Repl.by		Connection table	23 Sh.

	Cable designation	Type, core no. , cross section	Destination, item designation	Level
1	=D12-W603	NYCY 4x4/4	=W01+W1-X	
2				
3				
4				
5				
6				
7				
8				
9				
10				
11				
12				
13				
14				
15				

Terminal	Line-up type	Type of wiring
1...	URTKS, Fa. Phoenix	see circuit diagram

Cable connection to termination
A
B

1	2	3	4	5	6	7	8	9	10	11	12	13	14	15
BK														
BN														
GY														
BU														
B														
4														

Termination A Destination Item designation				Terminal strip Link	Term.-No	Cross-Ref.	Termination B Destination Item designation	
				-X612				
=D12	+S2	-X603	:12A		1	/NC1.2	-T12	:I
=D12	+S2	-X603	:22A		2	/NC1.2		
=D12	+S2	-X603	:32A		3	/NC1.3	-T12	:A
=D12	+S2	-X603	:42A		4	/NC1.3	-T12	:O
					5	/NC1.3	-T12	:M
					6	/NC1.3		
					7	/NC1.3	-T12	:H
				XX	8	/NC1.3	-T12	:N

Screen bus	A Cable clip	Cover
N-bus	B Screen bus	Insulation plate
PE-PEN-bus	C Cable gland	Higher level insulation plate
Used cores total	D Plug housing	Test socket
Continued on sheet	E Insulated	Slide bridge

ELCAD-Version 7.1.0
Last used: 02.02.2007
Archive: = / V / VS / 23
Translate file A: a-project.etr
Translate file B: b-Zestafoni_r.etr
Translate file C: C_FB_E.etr
Translate file D: d-Feld_e.etr
Project: P:/Anl/GEO/Zestafoni_V0/710/050915_WR_indoor/D00_R1.pro
Symbol library 1: GeorgSym
Symbol library 2: PTD60617
Symbol library 3: H2_60617
Symbol library 4:

CopyRight (C) Siemens AG 2005 All Rights Reserved

Rev.	Remarks	Date	Name			
				Date	31.03.05	
A	workshop rev.	13.09.05	Fra	Drawn	Witting	
R1	AS BUILT	12.12.06	GRE	Appr.	Wolf	
				Norm		

Power Transmission Rehabilitation Program II
GSE Georgian State Electric System
FICHTNER
Orig./Repl.f./Repl.by

Siemens AG

BB protection
=D00+R1-X612
Connection table

V =D00
+R1
VS23
(3)E50115-A2928-S371-R1
Sheet 23-23 Sh.