DRAWING №4

Instead of lenght 15.4m. of feeder portal traverse it must be made lenght of 14.2 m.

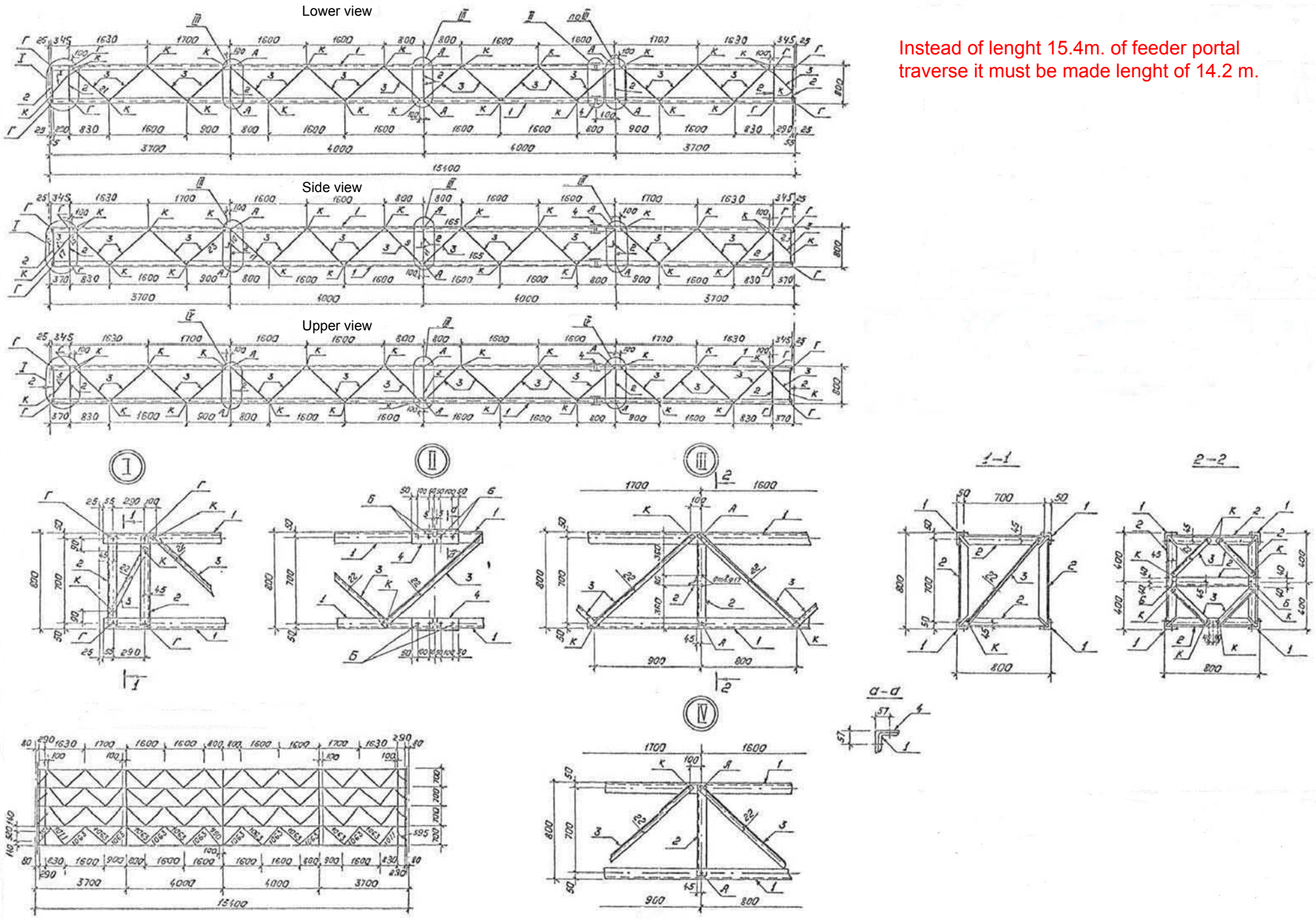

Pitting of traverse
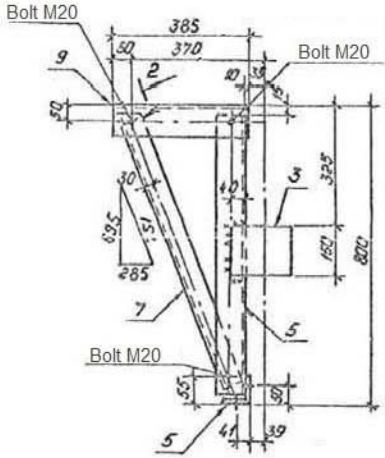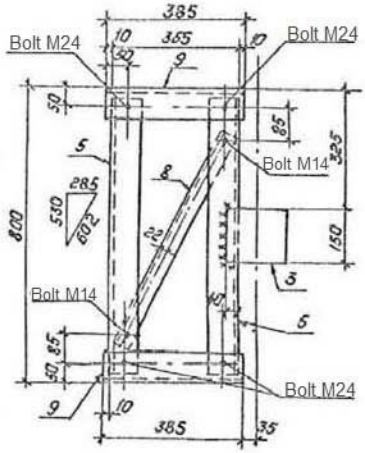
DRAWING №5